Better Homes and Gardens®

WOOD

THE MAGAZINE FOR HOME WOODWORKERS

$3.50

October 1985•ISSUE NO.7
Display Until October 15

HOW TO RESAW
make your own thin stock using our homemade jig

PALM SANDERS
why they're hot
how to choose one
comparison chart

FOUND WOOD
it's everywhere!
spectacular stock, free for the hauling

MORE PROJECTS!
thickness sander
hallway shelf
doll furniture
magazine rack
place mat and napkin ring set

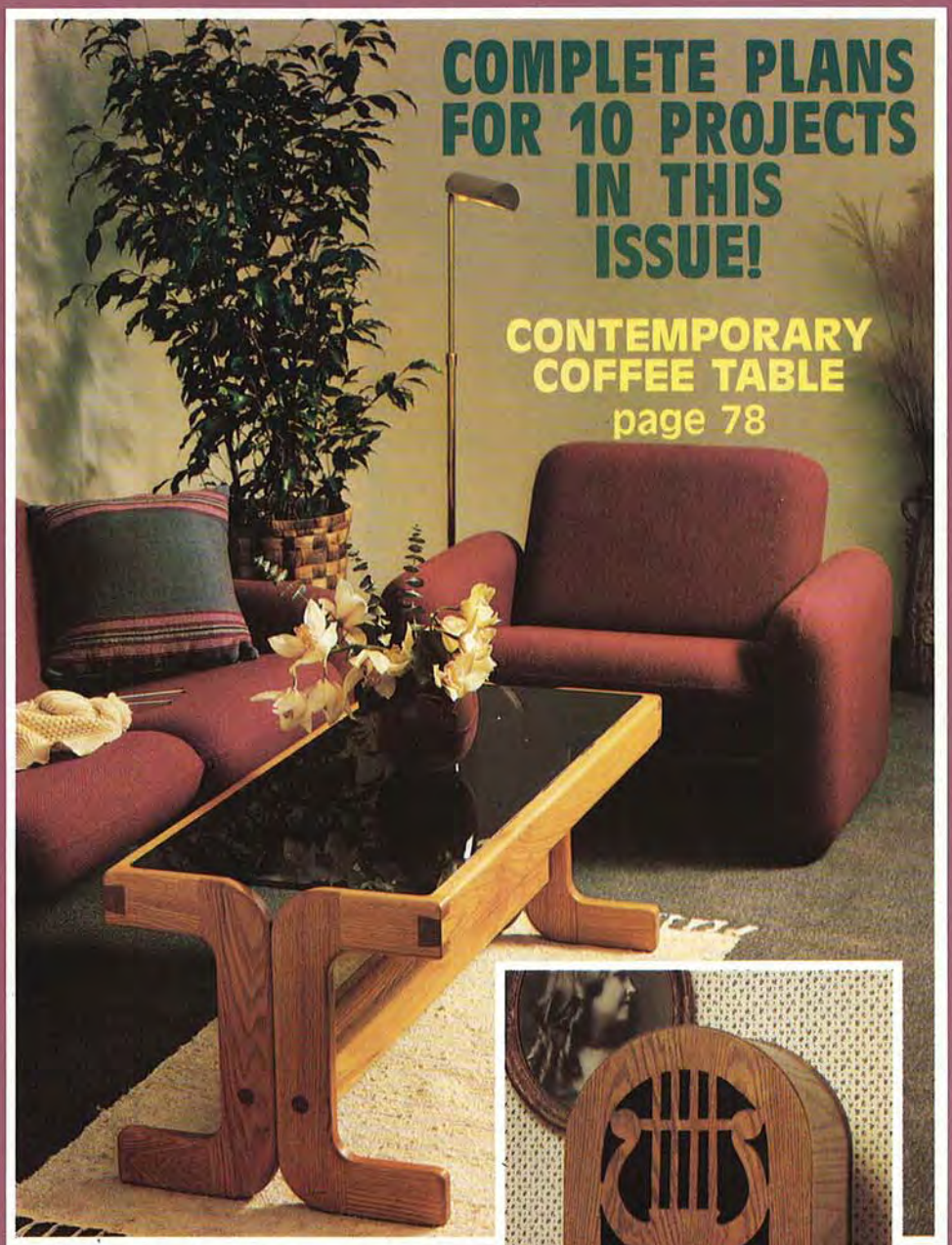

COMPLETE PLANS FOR 10 PROJECTS IN THIS ISSUE!

CONTEMPORARY COFFEE TABLE
page 78

OLD-TIME RADIO
page 82

0 14005 14072 10

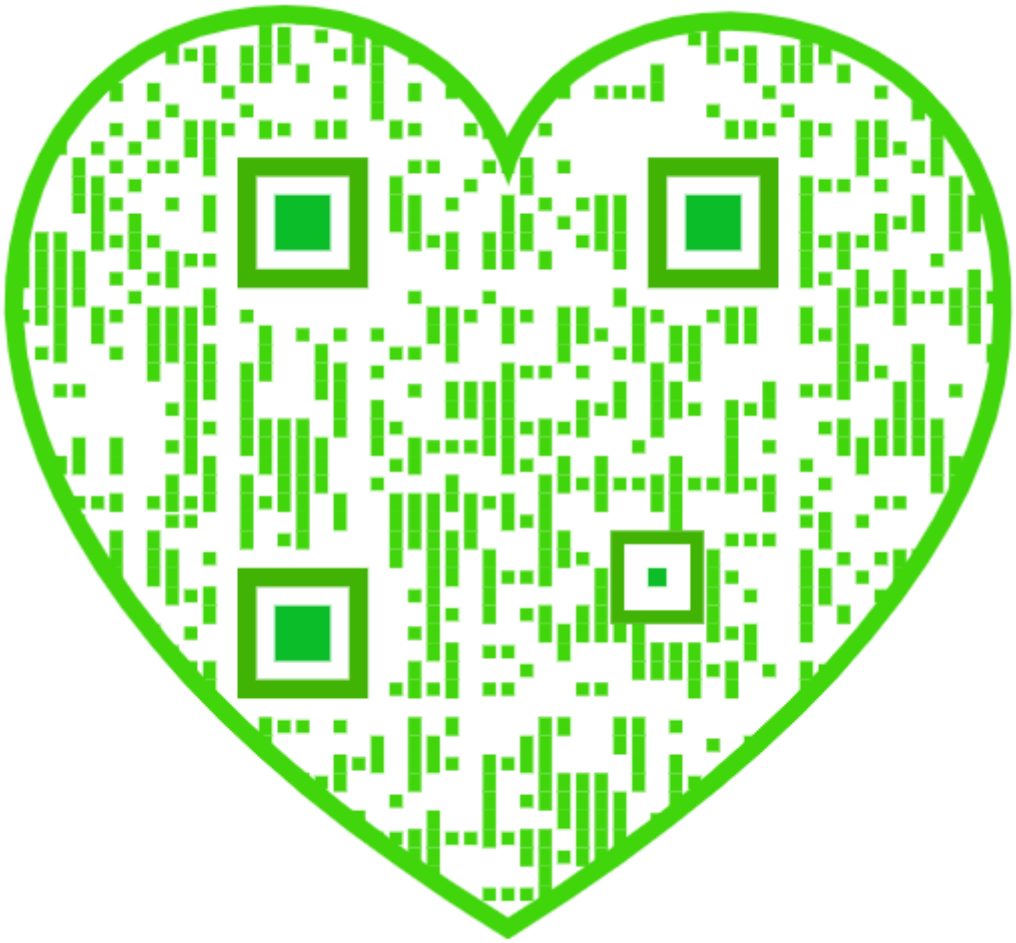

If the experts can't convince you to buy a Delta 13" Planer, maybe $150 will.

Maybe it isn't enough that the folks at *Workbench* found our 13" Planer "faultless." And thought it would be "difficult to create a safer machine."

Or that *Fine Woodworking* named it "first choice for an all-around planer."

Or that *Popular Mechanics* found it "a reasonably priced beauty . . . (that) cuts with (the) tenacity of a heavyweight."

And maybe it isn't enough that our planer's made of sturdy cast-iron. That it has a stationary table and adjustable head, big 13" × 5.9" capacity, a constant duty induction motor and 3" diameter cutterhead.

So even though we've already done all we could to make it a great planer . . . we decided to do all we could to make it a *great deal.*

So, from now until December 31, when you buy a Delta 13" Planer*, we'll send you a rebate check for $150.

And if our great features combined with our great deal aren't enough to convince you to buy a Delta 13" Planer . . . well, at least we'll know we gave it our best shot.

Call toll-free for the name of your participating Delta dealer: Delta International Machinery Corp., 800/438-2486 (in PA, 800/438-2487).

RC-33 13" Planer/Model 22-651 shown with accessory stand.
*Offer good on models 22-650, 22-651, and 22-655, only on sales in the continental U.S., Alaska, and Hawaii.

DELTA

Behind Our New Name Is Our Old Reputation.

There's a lifetime of magic moments waiting for you to discover. Like the day you hand your daughter the key to her own little dream house. When you've built this clever wooden keepsake yourself, those moments and memories become even more special.

Whether you're making a doll house for your daughter or a custom wooden deck for your own house, Shopsmith can help you build it right. With the Shopsmith MARK V, you get the five most-needed woodworking power tools in a compact unit the size of a bicycle. You can saw, drill, sand, bore and shape lumber into projects you'll treasure forever.

And you don't have to be a woodworking wizard to get started. The MARK V is easy to operate. And Shopsmith offers the instruction and educational programs you need to become the best woodworker you can be.

You can order a MARK V by mail, by phone, at one of our Shopsmith stores, or when you attend a Free Shopsmith demonstration in your area. But no matter how you choose to buy a MARK V, once you do, you'll have the tools and the know-how to build a dream come true.

Free Information Kit and Magazine Subscription!

Send in the coupon below and receive a Free MARK V Information Kit, including a copy of "How To Determine Your Best Power Tool Buy." Act now and you'll also receive a Free one-year subscription to "Hands On," the famous Home Workshop Magazine.

Call Toll-Free 1-800-228-5133
In Nebraska — 1-800-642-8788

© Shopsmith, Inc. 1985
Shopsmith® is a registered trademark of Shopsmith, Inc.
Available in the U.S.A. and Canada only.

☐ Please send me a Free MARK V Information Kit including the informative booklet, "How To Determine Your Best Power Tool Buy," and start my Free one-year subscription to "Hands On." I understand I am under no obligation.

Name _____

Address _____

City _____

State _____ Zip _____

☐ I currently own a Shopsmith woodworking power tool.

Shopsmith Inc.
For better woodworkers
And those who want to be
6640 Poe Avenue
Dayton, OH 45414-2591
Dept. 376L

Have a problem with your subscription?

We want to solve it to your complete satisfaction, and we want to do it fast. Please write to: Robert Austin, *Better Homes and Gardens® WOOD*, P.O. Box 10628, Des Moines, Iowa 50336.

You can help us by attaching your magazine label here, or copy your name and address as it appears on your label. Send this along with your correspondence.

Name

Address Apt. #

City State Zip

Moving?

Simply attach the mailing label from this magazine and write in your new address below. (Please allow 4-8 weeks.)

Your New Address Goes Here

Name

Address Apt. #

City

State Zip

Subscription Rate:

6 issues — 1 year — $15. Add $6 for Canadian or foreign postage.

☐ Renewal ☐ New Order

Need Faster Service?

Do us a favor... it is better to write us concerning your problem and include the magazine label. Also, address changes are handled more efficiently by mail. However, should you need to reach us quickly the following toll-free number is available:

800-247-2504

Better Homes and Gardens® WOOD

P.O. Box 10628 • Des Moines, Iowa 50336

Better Homes and Gardens® WOOD

THE MAGAZINE FOR HOME WOODWORKERS

October 1985 Issue No. 7

Editorial/Art Staff

Editor **LARRY CLAYTON**
Managing Editor **DAN KAERCHER**
Art Director **C.L. GATZKE**
Design Editor **JAMES R. DOWNING**
Features Editor **PETER J. STEPHANO**
How-To Editor **MARLEN KEMMET**
Project Builder **JAMES E. BOELLING**
Administrative Assistant **DARLENE REYNOLDS**

Technical Consultants: **GEORGE GRANSETH** Product Testing; **VERNON U. WARD** Collectible Tools; **PAUL L. McCLURE** Wood Technology

Editorial Director **DORIS M. EBY**
Publishing Director **ADOLPH AUERBACHER**

Editorial Services

Executive Director **DUANE L. GREGG**
Director, Editorial Research **C. RAY DEATON**
Administrative Editor **ROSE ANDERSON**

Publisher **JERRY KAPLAN**
Promotion/Research Director **THOMAS J. TROLAND**
Circulation Director **WILLIAM HUMMEL**
Production Director **DALE SCHENKELBERG**

Publishing Group Officers

President **JACK D. REHM**
Senior Vice Presidents
General Manager, Magazines **JAMES A. AUTRY**
General Manager, Books and Newspapers **FRED STINES**
Group Vice President
Editorial Director **DORIS M. EBY**

Corporate Officers

Chairman of the Board **E. T. MEREDITH III**
President **ROBERT A. BURNETT**
Group Presidents: Publishing **JACK D. REHM;** Broadcasting **W. C. McREYNOLDS;** Real Estate **ALLEN L. SABBAG**
Senior Vice President **JAMES CONLEY**
Vice Presidents: Corporate Relations **DONALD L. ARNOLD;** General Counsel and Assistant Secretary **THOMAS G. FISHER;** Product Development **NEIL KUEHNL;** Corporate Planning **HERB SCHULTE;** Finance **WILLIAM H. STRAW;** Administrative Services **GERALD D. THORNTON**
Secretary **BETTY CAMPBELL MADDEN**
Treasurer **MICHAEL A. SELL**
Controller **LARRY D. HARTSOOK**

Better Homes and Gardens® WOOD — the magazine for home woodworkers (ISSN-0743-894X) is published bimonthly in February, April, June, August, October, and December by Meredith Corporation, 1716 Locust Street, Des Moines, IA 50336. Second-class postage paid at Des Moines, Iowa. Trademark registered in Canada and Australia. Marca Registrada en Mexico. **SUBSCRIPTION PRICES:** One year $15 in the United States and its possessions. Canada and other countries add $6 per year. **POSTMASTER:** Send address changes to WOOD, 1716 Locust Street, Des Moines, IA 50336. October 1985, No. 7. **CUSTOMER SERVICE:** For service on your magazine subscriptions, including change of address, write to Customer Service Manager ROBERT AUSTIN, P.O. Box 10628, Des Moines, IA 50336. Please enclose a recent address label.

©COPYRIGHT MEREDITH CORPORATION 1985. ALL RIGHTS RESERVED. PRINTED IN U.S.A.

introducing...

MERLE©

The NEW Adjustable Corner Clamp

PATENT PENDING

Some of its unique features:

- forces frames into perfect square
- holds frames in square for jointing
- handles frames from 2⅝" x 2⅝" to 12 feet around
- creates even jointing
- quickest way to clamp mitres
- adjustable clamping pressure
- sturdy cast aluminum and steel construction

CALL TOLL FREE 1-800-428-2222
(In PA 1-800-222-2292)

VISA or MasterCard accepted
or send check to:

INDUSTRIAL ABRASIVES CO.
P.O. Box 8611, Reading, PA 19603

FREE

$7.50–½" CARBIDE-TIPPED DOVETAIL ROUTER BIT WHEN YOU ORDER THIS SET OF SIX TOP-QUALITY ONE-PIECE CARBIDE-TIPPED ROUTER BITS IN THE MOST USEFUL SIZES AND SHAPES.

¼" SHANK SET **$64.95 PPD.**
½" SHANK SET **$69.95 PPD.**

AND WHAT'S MORE WE INCLUDE AN EXTRA BEARING SO THE ROUND-OVER MAY BE USED FOR BEADING.

SHAPER CUTTERS
½" BORE $20.00

INDUSTRIAL SHAPER CUTTERS
¾" BORE WITH ½" BUSHING $30.00

6-PIECE CABINET SETS
¾" BORE WITH ½"BUSHING $149.00

3 WING PANEL RAISER
1¼" BORE WITH 1" & ¾" BUSHINGS $48.00

ORDER BY PHONE WITH VISA/MC OR SEND MO, CHECK, VISA/MC NUMBER, EXP. DATE, PHONE NUMBER. CATALOG $1 — FEATURING OVER 200 CARBIDE TIPPED ROUTER BITS AND SHAPER CUTTERS.

VISA

Satisfaction Guaranteed or your Money Back. Call 206-236-0272 or write:

MasterCard

CASCADE PRECISION TOOL CO. INC.
P.O. BOX 848, MERCER ISLAND, WA 98040.

OUR NEW COMPOUND MITER SAW MAKES ALL KINDS OF PERFECT FITS.

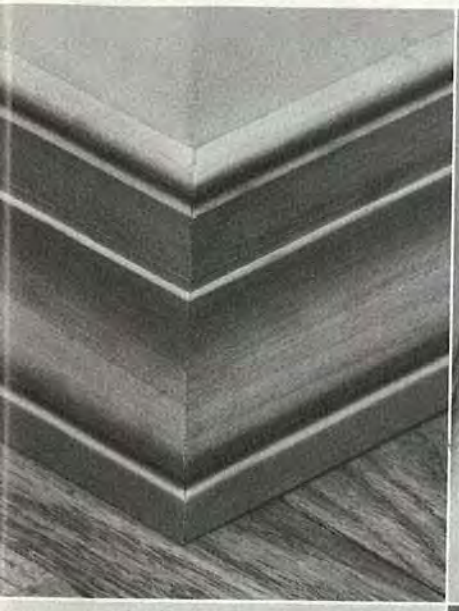

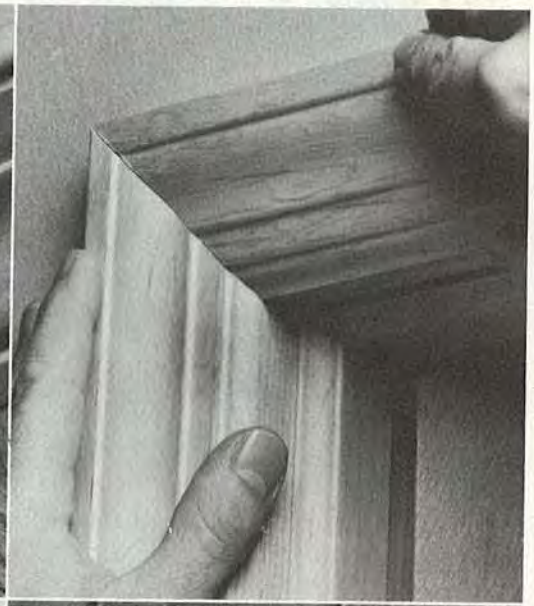

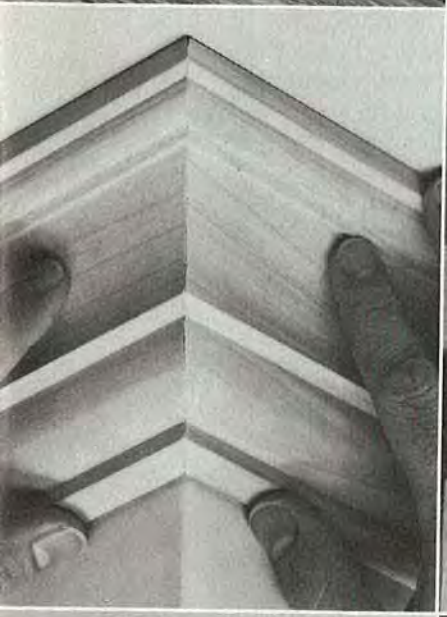

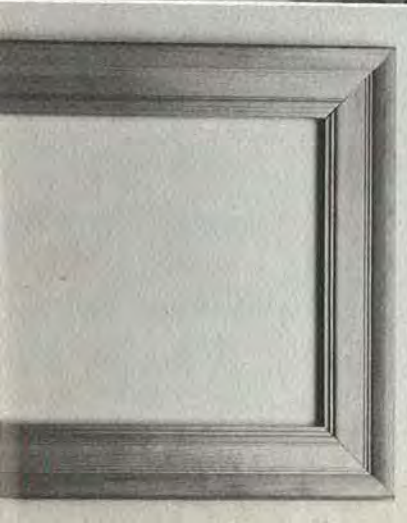

Nothing can be more frustrating than trying to make perfect miters and bevels. Especially when you're working with things like tricky crown molding.

Well, Black & Decker is about to change all that with our new compound miter saw.

It makes regular and compound miter cuts (up to 45 degrees) at the same time.

And it can quickly and accurately cut widths up to 5¼." You can even use it to easily trim 2x4's.

It's portable and lightweight, too. So it'll travel anywhere you do. Whether you're making door frames or picture frames.

Of course you also get our Full 2 Year Home Use Warranty.

And amazingly enough, Black & Decker's new 8¼ in. compound miter saw is no more expensive than some manual miter boxes.

So it actually fits your budget as perfectly as it fits a corner.

BLACK & DECKER™
Ideas at work.

© 1985 Black & Decker (USA) Inc. *Maximum Motor Output

NEW! 4 IN 1

PLANER/MOLDER JOINTER/SANDER

Put this versatile power tool to work in your own shop. See how fast it ***pays for itself!*** Quickly converts low-cost rough lumber into valuable finished stock. Turns out perfect quarter-round casing base mold tongue & groove . . . all popular patterns . . . any custom design. Commercial-size jointer produces super-true edges, squared stock, bevels, chamfers. Drum sanding attachment saves hours of tedious hand work.

Saves You Money . . . Makes You Money!
Start your own high-profit business selling trim, all types of trim and millwork to lumberyards, carpenters, contractors, do-it-yourselfers. Use it to make grandfather clocks, gun cabinets, paneling, flooring, furniture . . . almost any home or farm building project.

Jay Hedden, Editor of Workbench Magazine, writes:
"It does an excellent job of planing, on a par with more expensive machines, and even better than some commercial models."

Nothing Extra to Buy
Comes complete with 115/230V motor, switch, stand, knives, full instructions . . . ready to use. Outperforms other combination tools at over twice its low price. Easy terms.

30-Day FREE Trial!
Send For Complete Facts! MAIL COUPON TODAY or

Call Toll-Free 1 (800) 824-7888, Oper. 642

Woodmaster Power Tools, Inc., Dept. PW8
2908 Oak, Kansas City, MO 64108

INFORMATION KIT . . . FREE!

No Obligation . . .
No Salesman Will Call

Woodmaster Power Tools
Dept. PW8
2908 Oak
Kansas City, MO 64108

☐ **YES!** Please rush me, free and without obligation, your Complete Information Kit on the new PLANER/MOLDER/JOINTER plus facts on Woodmaster's 30-Day FREE TRIAL Money-Back Guarantee.

Name_____

Address_____

City_____

State_____ **Zip**_____

THE EDITOR'S ANGLE

Some people have all the luck.

Ever notice how good you feel when you get some new clothes, a nice car, or a woodworking tool you've had your eye on for a long time? Great feeling, isn't it! That's pretty much the mood among the staff here at *WOOD* right now because we're just beginning to settle into our new offices and shop. It's been a long wait, but definitely worth it.

Probably the luckiest person on the staff is Jim Boelling, *WOOD*'s project builder. He's the guy who gets to do what the rest of us would like to be doing all day—making stuff from wood. The photograph above (that's Jim doing his thing) gives you an idea of how our shop looks when it's all spiffied up. I'd be lying, though, if I told you it looks this way normally. We have the same problems keeping our shop organized and cleaned up you probably do. Jim says he sometimes feels like a kid in a candy store. I would, too, if I had a shop the size of his.

By the way, if any of you ever get to Des Moines, stop in to see us. We're at 1912 Grand Avenue, but our mailing address is still 1716 Locust Street. I'll be more than happy to put on some coffee, give you a tour of the shop, and show you some of the projects that have appeared in the magazine—as well as some that are under construction or on the drawing board. Several readers have come in already, and we always learn a lot from talking with each other. ■

Print this article

Larry Clayton

Get a FREE Ryobi Router

and save $213.00 when you buy Freud's NEW Industrial Carbide Router Bit Set.

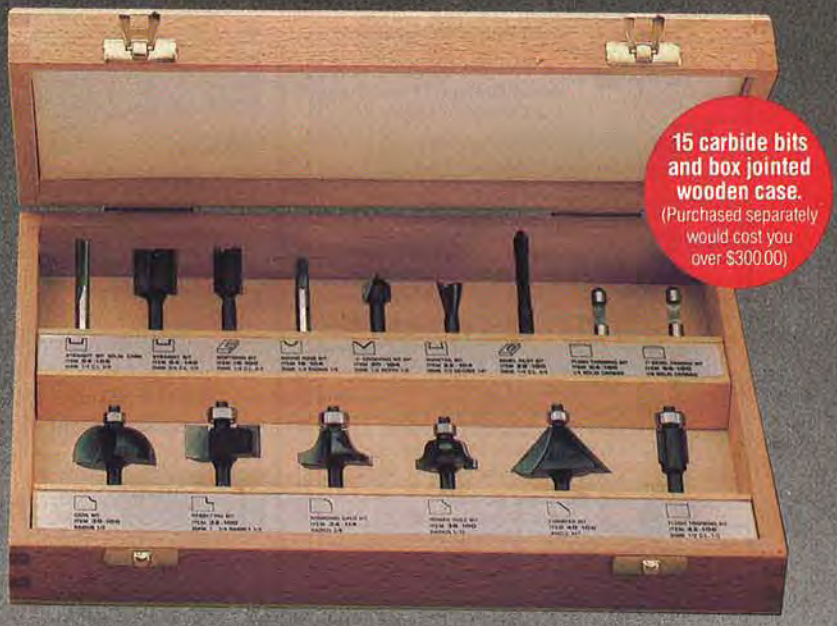

Router Reg. $162.00, Router Bit Set $300.00 Value, Total Value $462.00

Yours for only $249.00

The Router Bit Set

Freud engineers have designed an industrial quality carbide router bit set at an affordable price. These precision tools are of the finest quality, and manufactured using only carbide or carbide-tipped bits. Carbide will last up to 50 times longer than steel bits before sharpening is required.

These bits exceed all requirements when cutting hard or soft woods, plastics or composition materials. In manufacturing, specific carbide grades are used to insure durable edges, and all bits are ground twice. This provides an extremely sharp mirror edge that cuts like no other on the market.

The Router

Ryobi (Model R-151) 1 Horsepower Plunge Router with new trigger switch on handle. Plunges 0 to 2 inches. It's light weight and compactness makes routing easy to handle. The plunge depth is set quickly by thumb action. The stop block can be adjusted for 3 different cutting levels. 24,000 RPM's. Double insulated. ¼" collet capacity. Comes complete with router bit adapter, template guide, straight guide and spanners.

90-100 Set consists of:

Item	Description	Cutting Length	Cutting Dia.	Radius (Bevel)	Depth of Cut	List Price
04-106	Solid Carbide Straight 2 Flute	3/4	1/4			11.05
04-140	Straight 2 Flute	3/4	3/4			15.60
16-100	Mortising	3/4	1/2			12.73
18-104	Solid Carbide Round Nose	1/2	1/4	1/8		17.64
20-104	"V" Grooving		1/2		1/2	21.15
22-104	Dovetail		1/2	(14°)	1/2	16.33
26-100	Panel Pilot	3/4	1/4			9.43
30-106	Cove			1/2	3/8	33.64
32-100	Rabbet	1/2			3/8	27.62
34-114	Rounding Over	With Bearing Guide		3/8		30.03
38-100	Roman Ogee	With Bearing Guide		5/32		32.90
40-106	Chamfer	1		(45°)		26.42
42-106	Flush Trim	1/2	1/2			15.62
64-100	Solid Carbide Flush Trim	3/8				7.64
66-100	Solid Carbide Bevel Trim	1/4		(7°)		8.30

Box jointed wooden case, value $28.00

Call Us Toll Free!

FOR THE NAME OF YOUR LOCAL DISTRIBUTOR:

- In California Call Toll Free: 1-800-824-0141
- If You Live In This Area: 1-800-824-8045
- If Your Live In This Area Call Toll Free (Outside NC) 1-800-334-4107

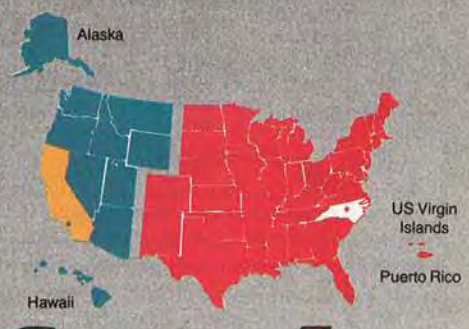

freud

218 Feld Ave., High Point, NC 27264
(919) 434-3171

1570 Corporate Dr., Suite G
Costa Mesa, Cal. 92626
(714) 751-8866

Offer valid only in USA through Dec., 31, 1985

Woodworkers' Hardware ORDER FORM

Qty. Note: C = 100 Total

Black Hammer Hinge
$2.70/2 $1.62/2
$11.95/10 $7.17/10
Screw for Above
$4.96/C $2.97/C

Birch Mug Peg
$.43/ea. $.26/ea.
Birch Shaker Peg
$.47/ea. $.28/ea.

Birch Furniture Spindles
6 inch
$.70/ea. $ .42/ea.
8 1/2 inch
$1.20/ea. $.72/ea.

#S4 Galley Spindle
Birch $.28/ea. $.17/ea.
Oak $.35/ea. $.21/ea.

#S5 Galley Spindle
Birch $.41/ea. $.25/ea.

Wood Wheels
7/8" $7.80/C $4.80/C
1" $11.58/C $6.95/C
1 1/4" $15.00/C $9.00/C
1 1/2" $18.35/C $11.01/C
1 3/4" $26.00/C 15.60/C
2" $32.50/C $19.50/C

#AP1 Axle Peg
Fits 1" to 2" Wheel
$6.95/C $4.17/C

Brass Plated Flat Head Wood Screws
(3/8" x #2) $4.17/C $2.50/C
(1/2" x #2) $4.28/C $2.57/C
(1/2" x #4) $4.40/C $2.64/C
(1/2" x #5) $5.03/C $3.02/C
(3/4 x #7) $5.27/C $3.16/C

Screw Hole Buttons
3/8" $3.03/C $1.82/C
1/2" $3.23/C $1.94/C

Dowel Pins 3/8"x2"
$3.08/C $1.85/C

Saw Tooth Hangers
$6.95/C $4.17/C

Brass Plt. Picture Hanger
$7.95/C $4.77/C

Clock Movements w/Hands
Q82
$10.62/ea. $6.37/ea.
$49.50/5 $29.70/5
5" Clock Dial
— White Plastic
$2.50/ea. $1.50/ea.

Lazy Susan Bearing
3" $1.15/ea. $ .69/ea.
4" $1.60/ea. $ .96/ea.
6" $2.89/ea. $1.73/ea.

Brass Plated Candle Cup
$5.00/10 $3.00/10
$49.00/C $29.40/C

Two Prong , 6"
Brass & Porcelain Hook
$4.95/ea. $2.97/ea.
$45.00/10 $27.00/10

Three Prong , 6"
Brass & Porcelain Hook
$8.25/ea. $4.95/ea.
$29.99/4 $18.00/4

Jiggle Eyes
(1/4") $2.46/C $1.47/C
(1/2") $3.45/C $2.07/C
(4/5") $6.85/C $4.11/C

Disk Magnets
$2.98/6 $1.79/6

Note: C = 100

☐ Catalog $1.00 or free with order — Total Order
☐ Minimum Order is $25.00 — MN Res.- 6% Tax

Order Amount :	Shipping :
$25.00 to $49.99	$3.50
$50.00 to $99.99	$4.50
Over $100.00	$5.00

Shipping
Total Enclosed
☐ Visa ☐ Master Card

MONEY BACK GUARANTEE! Alaska, Hawaii, Canada & APO Orders Add $6.00

SIGNATURE
CARD NO EXP DATE
NAME
ADDRESS CITY
STATE ZIP PHONE ( )

MEISEL HARDWARE SPECIALTIES
P.O. Box 258W10 Mound, Minnesota 55364 • (612) 472-5544

Better Homes and Gardens® WOOD

THE MAGAZINE FOR HOME WOODWORKERS

OCTOBER 1985 ISSUE NO. 7

WOOD PROFILE
BIRCH 37
Beautiful and strong, this alluring blonde wood from the North captivated early designers of contemporary furniture.

CRAFTSMAN CLOSE-UP
A CASE FOR CLOCKS 38
"Putting together a clock is pretty much a matter of logic," says woodworker Bill Hopkins. Share the secrets of the acorn clock pictured here, as well as other examples of Bill's craftsmanship.

TOOL BUYMANSHIP
BEGINNER'S GUIDE TO WOODCARVING TOOLS 42
You can whittle away an afternoon with just a jackknife, but you need these tools if you're *really* serious about carving.

SHOP-TESTED TECHNIQUES
HOW TO RESAW *SAFELY* 44
Use our tips and a homemade jig to resaw your own catalog-quality thin stock. We couldn't believe the smooth results with this method!

HOMEMADE TOOL
BUILD YOUR OWN SURFACE SANDER FOR JUST $150 48
Getting rid of unsightly mill marks and other minor surface blemishes has never been easier. With our plans, you can build this sturdy sander for far less than the cost of a commercial machine. See for yourself. . . .

NOW YOU CAN BUILD IT
PLACE MAT/NAPKIN RING SET 54
Our resawing technique lets you make your own thin stock for this distinctive dining duo.

WOVEN-WOOD MAGAZINE RACK 56
Keep your reading matter organized in style. Woven inserts of resawn pine make this project a real standout.

SHOP SAFETY
HEARING PROTECTION: YOUR BEST DEFENSE AGAINST SHOP NOISE 59
Hearing loss is a silent threat, but it's real nonetheless—epecially in a noisy workshop.

FURNITURE PROJECT
BURLED-TOP HALLWAY SHELF 62
Ready to tackle a raised-panel project? This handsome walnut shelf with its burled veneer top makes an ideal candidate.

FOUND WOOD 66
Searching out these forest gems is great fun, and you won't believe the dazzling, one-of-a-kind projects you can fashion from them.

JUST FOR KIDS
SMILE-AWHILE DOLL FURNITURE 69
Be a hero to that special youngster by building our doll-sized swing, desk, and high chair—all made of dowels and scrap.

TOOL BUYMANSHIP
PALM-GRIP SANDERS 74
It's small wonder that these little powerhouses are catching on among home woodworkers. Here's a complete buymanship guide.

FURNITURE PROJECT
CLEARLY CLASSY OAK COFFEE TABLE 78
The project on this issue's cover represents one of the best contemporary designs we've seen in a long while.

HOME ACCESSORY PROJECT
THE WIRELESS UPDATED 82
It may look old-fashioned, but this strictly up-to-date design houses a stereo cassette player and radio unit. Nostalgia never sounded so good!

SHORT-SUBJECT FEATURES

Magazine Customer Service Information 2
Editor's Angle 4
Talking Back 12
Bulletin Board 20
Tips from Your Shop (And Ours) 22
Products that Perform 28
Associations 34
Wood Words 36
Project Showcase 60
Old Hand Ways 93
Book Reviews 97
Wood Anecdote 103

NOW! REDUCE THE RISK AT YOUR TABLE SAW

WITH THE NEW MOBILE™ SAWING CENTER

OUTFEED ROLLERS
- safe, accurate sawing
- handle panels with ease
- available in 15" and 37" widths
- dual-position table

AND INCREASE FLOOR SPACE

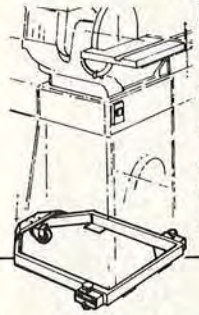

MOBILE MACHINE BASES
- increase shop working area
- maximize usable floor space
- 3 point base will not rock
- locking wheels
- makes machine so easy to use and store
- over 80 standard models

PLANER STAND WITH ROLLERS
- raises planer to proper working height
- provides machine mobility
- five-fold increase in workpiece support
- storage is a snap

NEW

ROLLERTABLE
Rock Solid Support
- adjustable
- portable
- use at any machine

PEDESTAL ROLLER

Discover HTC's many unique products designed only with you, the dedicated woodworker in mind. Find out how you can make your machining safer, increase working area of your shop and accomplish nearly impossible tasks easily, quickly and accurately - **all by yourself!**

CALL TODAY!

HTC PRODUCTS, INC.
120 E. HUDSON S-8
ROYAL OAK, MI 48067
(313) 399-6185

HTC MAKES IT MOBILE

1-800-624-2027 ext. 112

Announcing

THE NATIONAL HISTORICAL SOCIETY

CIVIL WAR CHESS SET

Richly detailed portrait sculptures of great American heroes
—in solid pewter, solid brass and fine enamels.
An heirloom chess set to be enjoyed for generations.
Created by the world-famous craftsmen of The Franklin Mint.

THE NATIONAL HISTORICAL SOCIETY is dedicated to bringing the excitement and power of American history—as well as its significance—to people in every part of the land.

It is in keeping with this purpose that the Society is about to issue its own Civil War Chess Set. A dramatic tribute to the heroes of both North and South—and a work all the more intriguing because the playing pieces include richly detailed three-dimensional *portrait sculptures* of the great Generals of Union and Confederacy, captured for the ages in solid pewter, solid brass and fine enamels.

This extraordinary new chess set will be crafted to the highest standards of quality and historical authenticity. The National Historical Society has appointed The Franklin Mint to create the sculptures, each of which will be a new and original design. Some figures will be shown standing, some seated, some kneeling, some mounted on horseback. And each figure will be painstakingly crafted of solid pewter, hand-finished, then set atop a solid brass pedestal base embellished with a circular band of richly colored enamel—*blue* for the soldiers of the North, *gray* for those of the South.

Every sculpture, moreover, will be so rich with authentic detail that only the artists and master craftsmen of The Franklin Mint, steeped as they are in the tradition of *precision coinage,* could have achieved it. Indeed, every nuance of facial expression, uniform and weaponry—right down to the buttons, braiding, sabers and carbines—will be depicted with meticulous accuracy.

Thus, The National Historical Society Civil War Chess Set is also a magnificent *collection.* A triumphant achievement of portrait sculpture—and the ultimate in micro-detailed miniaturization.

ALL FIGURES SHOWN ACTUAL SIZE.

Major General
William Tecumseh Sherman
BISHOP

General in Chief
Ulysses S. Grant
KING

General in Chief
Robert E. Lee
KING

Major General
J.E.B. Stuart
KNIGHT

Available only by direct subscription. Issue Price: $17.50 per sculptured chess piece.
Limit: One complete set per subscriber. Please enter your subscription by October 31, 1985.

This handsome pewter-finished chessboard and fitted presentation case will be provided as part of the set.

A dramatic showpiece for your home or office

The chessmen themselves are scaled so that each one will suit the function assigned to it in the game of chess. And the handsomely crafted, pewter-finished playing board has been sized with equal care. Specially fitted, to also serve as the cover for the case which will house all 32 playing pieces, the board completes a presentation so attractive that the chess set will be played and displayed with pride and satisfaction. A Certificate of Authenticity, and specially written reference materials, will also be provided.

Exhibited on a table or cabinet in your living room, family room, den or office, this is a possession certain to evoke both admiration and respect from all who see it. A unique tribute to unique Americans. A work of heirloom quality, that will bring you endless pleasure through the years. And a chess set eminently worthy of being passed on from generation to generation.

The subscription rolls are now open. The work may be obtained *only* by direct subscription, with a limit of one complete set per subscriber.

The chessmen will be issued to you at the attractive price of $17.50 each, with the specially designed playing board and protective case provided at no additional charge. As a subscriber, you will receive two sculptured pieces every *other* month. You will, however, be billed for only *one* chessman at a time—a total of just $17.50 per month. In addition, you will have the option to complete your set earlier, if you wish—but you will be under no obligation to do so.

Here, then, is a work that will bring lasting pleasure to chess enthusiasts, history buffs, collectors of military miniatures—to anyone who appreciates our nation's heritage. Indeed, it is an unmistakably American chess set, that will make a dramatic addition to any room. And an exciting showpiece that will be displayed, enjoyed and treasured by each succeeding generation.

To acquire The National Historical Society Civil War Chess Set, no advance payment is required. But please note that the accompanying Subscription Application is dated and should be returned postmarked by October 31, 1985.

© 1985 FM

SUBSCRIPTION APPLICATION

The National Historical Society

CIVIL WAR CHESS SET

Please mail by October 31, 1985.

The National Historical Society
c/o The Franklin Mint
Franklin Center, Pennsylvania 19091

Please enter my subscription for The National Historical Society Civil War Chess Set, consisting of 32 chessmen.

I need send no money now. I will receive two new playing pieces every *other* month, but will be billed for just one piece at a time—$17.50* per month—beginning when my first shipment is ready to be sent. I will receive the fitted presentation case and pewter-finished chess board at no additional charge.

**Plus my state sales tax and $.50 per chessman for shipping and handling.*

Signature_____
ALL APPLICATIONS ARE SUBJECT TO ACCEPTANCE

Mr./Mrs./Miss_____
PLEASE PRINT CLEARLY

Address_____

City_____

State, Zip_____

Limit: One complete set per subscriber.

78

We welcome comments, criticisms, suggestions . . . even an occasional compliment. The volume of mail we receive makes it impossible to answer every letter, but we promise to do our level best. Send your correspondence to:

Letters Editor
Better Homes and Gardens®
***WOOD* Magazine**
Locust at 17th
Des Moines, IA 50336

PIPE-CLAMP TIP

Your January issue so impressed me that I built a new workbench around your "Quick-Clamp End Vise" (page 88). Having one of the older pipe clamps with a spring-loaded tail stop, I modified it by drilling a hole in the release lever, inserting a fishing snap swivel connected to a piece of stainless steel leader, and a key ring to achieve the same result.

—Arthur V. Lodovichetti, Kill Devil Hills, N.C.

Here's a diagram of Arthur's modification. Pretty clever!

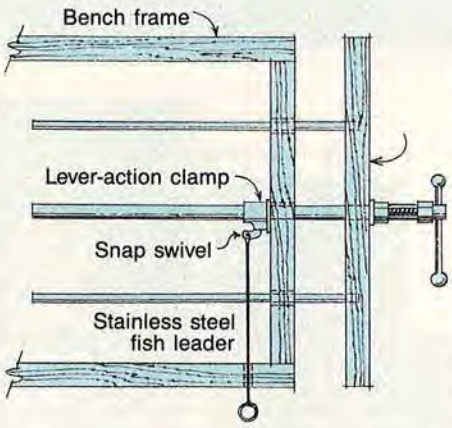

WOOD: THE TIE THAT BINDS

Originally I subscribed to your magazine to surprise my husband, an avid woodworker. I personally was never very interested in the mechanics of woodworking. I just enjoyed the results. . . . Now, using tips and pointers from *WOOD*, I have begun taking an active part in some of my husband's projects. The knowledge I have gained through some of your articles has made woodworking a shared experience.

—Terri Waldron, El Cajon, Calif.

Your letter pleases us to no end, Terri. Woodworking often is a solitary hobby, but it doesn't have to be. In fact, we're planning a feature about families that share their interest in woodworking—mom, dad, kids, maybe even grandparents and grandkids. If you fit the bill, drop a note to our features editor, Peter J. Stephano, at the address listed at the top of this page.

WE AIM TO PLEASE

Our best source of article and project ideas is you, our readers. If you're itching to learn more about a woodworking topic, write to us.

I would like to see a good step-by-step on stave construction of small objects such as tankards and bowls.

—Joseph M. Haugen, Ventura, Calif.

Joseph, you'll want to turn to two stories in this issue. Stave bowls are the first reader project featured in Project Showcase. And, on a grander scale, barrel-making is the subject of this issue's Old Hand Ways. We promise more on this topic in the future.

I'd like to see you do more on wood bending.

—Robert B. Wilson, Clearwater, Fla.

You're gonna love the December issue, Robert. We're working on a bentwood coat tree and sled, as well as a "Shop-Tested Techniques" article about the cold-bend process, among other features.

I would like you to include in your magazine a cumulative index covering previous issues.

—William Chibbard, Edison, N.J.

Great idea, William! We hope to publish our first index in the magazine early in 1986. Stay tuned.

ON THE LEVEL

In your June, 1985 issue, the article on how to build a level (page 40) doesn't tell where to obtain the two Macklanburg-Duncan replacement vials for the #600 series level, complete with mounting screws (part #0319-3000). Please advise.

—John Zinn, Cuero, Tex.

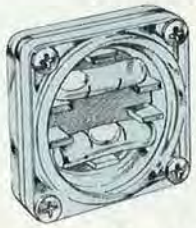

Whenever it's possible and it makes sense, we are listing addresses of mail-order suppliers in a Buying Guide at the end of our projects articles.

However, in many instances—and this is one of them—the manufacturer tells us that you need to order the part you need through your local hardware dealer.

If that fails, call toll free 1-800-654-8454 for advice. We paid $2.99 for the set. We know the vials can be ordered through Ace, True Value, Payless Cashways, and other dealers.

SETTING THINGS STRAIGHT

Putting together your "Pint-Sized Picnic Table" (*WOOD*, June, 1985, page 56), I found that there is no way the finished size of legs "F" can be 30" long and both ends cut at a 38° angle with the distance between the bottom of the legs 39" and overall height 21", as stated in your diagrams.

—Walter J. Pabst, Chicago, Ill.

We erred, Walter—our apologies to you and to the others who wrote. Our consolation lies in the fact that you wound up with extra stock rather than coming up short. The length of the parts labeled F is 27¼", not 30", as stated originally.

TWO BITS

● *In our article on "Basic Raised-Panel Construction" (WOOD, June, 1985, page 43), we mentioned two panel-raising systems that let you perform all the nec-*

Continued on page 19

When you order router bits, is something lost in the translation?

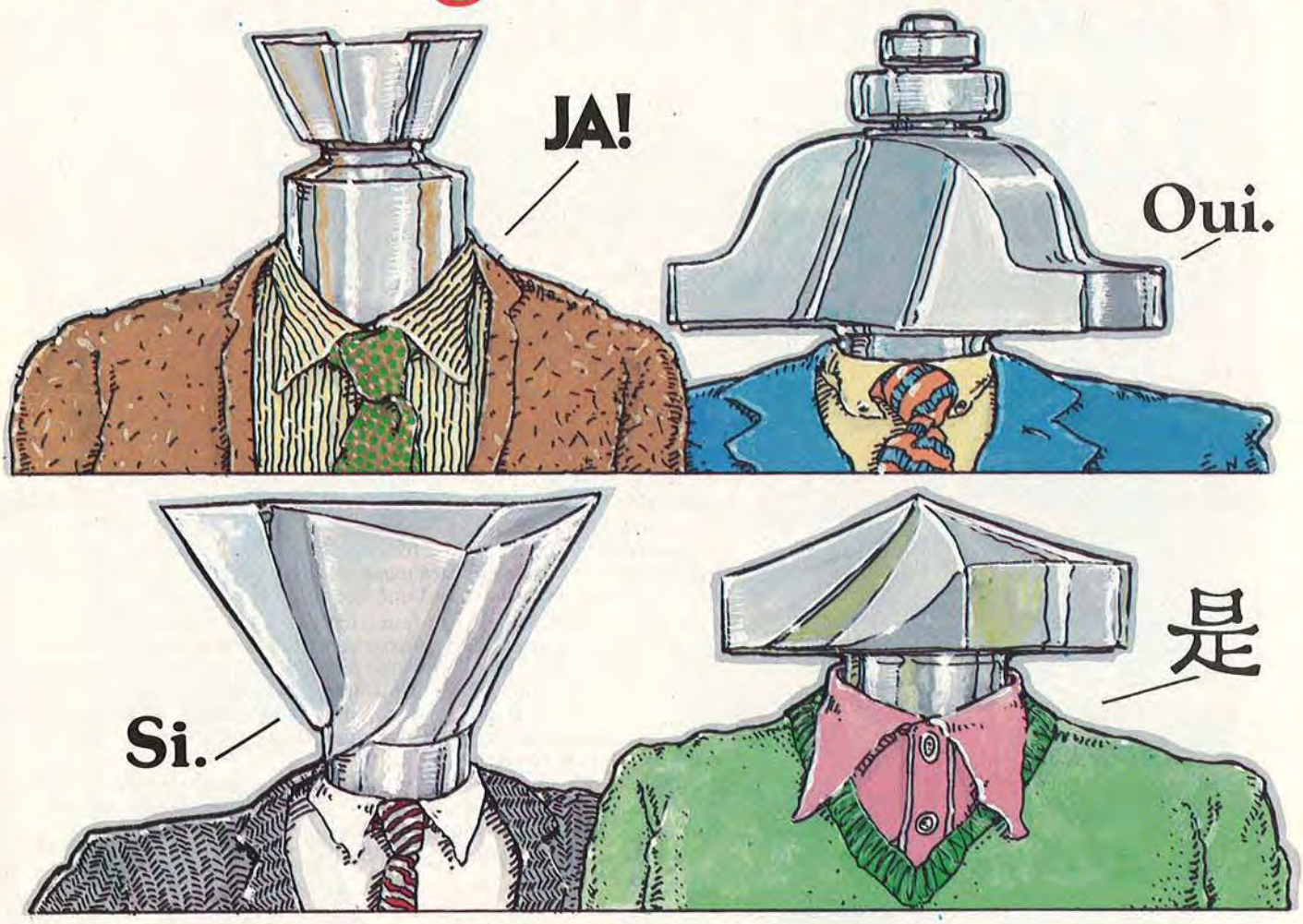

Maybe your supplier speaks very fluent "discount." But how conversant is he in "quality?" Sound more like "double talk?"

You know that cost counts when you buy router bits—and DML is the last to deny that fact. But a sharp buyer always looks for the best bit for his money. So wait a moment before you plunk down your dollar. Realistically, do you know your seller and his wares? Are his prices *always* the best? Is he always promoting some sort of lowball bargain? Don't you wonder... why?

DML, also, runs the occasional promotion. But we feel we should give you more than just dollar inducements. And we do.

DML offers you a router bit for every application. Bits of heat-treated tool steel. Dressed to industrial standards, tipped with premium carbide, diamond honed, precision balanced. Over 370 in all. In a whole slew of sizes and configurations, to fit your portable and stationary equipment. Industrial quality router bits, matched to your exact cutting needs.

In sum, DML speaks your language. You get the right bit. At the right price. You see, we're a bit suspicious of a manufacturer whose big story is a cheap price. Maybe you should be, too.

For more information or the distributor nearest you, contact DML, Inc., 1350 S. 15th Street, Louisville, KY 40210
502-587-5562
800-233-SAWS

NAME _____ W

COMPANY NAME _____

ADDRESS _____

CITY _____ STATE _____ ZIP _____

Straight talk about 1,002 cutting tools.

DML

Cutting everything but corners

A SUBSIDIARY OF VA VERMONT AMERICAN CORPORATION

Take this giant $47.90 Capotosto WOODWORKING LIBRARY FOR JUST $3.95

PLUS DELIVERY AND HANDLING

as your welcome to Popular Science Book Club

More than **3000** ORIGINAL ILLUSTRATIONS, PLANS, SEQUENCE PHOTOS show you every detail of project construction with hand and power tools . . . *plus* every woodworking technique you must know!

COMPLETE BOOK OF WOODWORKING
WOODWORKING TECHNIQUES & PROJECTS
by Master Woodworker R. CAPOTOSTO

Whether you're a weekend woodworker or a pro in the business, your woodworking success and satisfaction *for projects big and small* are practically *guaranteed* with this superb how-to library!

Super-handy and unique, these excellent Capotosto books demonstrate all the basics and fine points you need to know *and* they introduce scores of *innovative woodworking tips and techniques* that save you time, materials, and dollars!

You'll gain confidence and learn new skills with these important books. They're loaded with *illustrated answers* on wood indentification, selection, handling . . . *pro tips* on wood joinery, sizing, measuring, cutting, matching, filling, finishing . . . valuable *time and money-saving how-to* on building, repairing, construction techniques—including dozens of *original woodworking project plans* you can build and finish yourself!

You get nearly 50 measured construction plans for tables, chairs, beds, cabinets, lamps, benches, a dry sink, mobile greenhouse, butcher block, tea cart, gateleg table, campaign desk, grandmother clock, rolltop desk, hutch, lounger, candlestand, full-function wall unit and much, much more!

Yes, this valuable $47.90 woodworking package—*custom-written exclusively for Popular Science Book Club*—offers you an enormous range of do-it-yourself ideas, know-how, and challenge. More than 3000 illustrations, photos, diagrams (created specifically for these books), show you exactly how to do each technique and project step by step. More than 840 pages of easy-to-follow text instruct you carefully and exactly. *Nothing is left out!*

As a member of Popular Science Book Club, you get to choose the best from hundreds of *brand new,* hard-to-find do-it-yourself books on: Home Repair & Improvement, Home Workshops, Basic & Advanced Woodworking, House Building, Remodeling, Insulation, Wiring, Plumbing, Masonry, Electronics, Appliance Repair, Furniture Building, Energy Savers, Solar, and much more. *It's always your choice* and there are many bargains to choose from! To become eligible for these bargains, mail the card *today.* There's no risk!

FREE when you join

This handy Shop Guide measures in inches, centimeters. It's also a compass, protractor, drill and chisel grinding gauge, bolt and screw sizer, bolthead and penny nail measurer, and more!

Working an entire edge with a pattern. The collar and pattern are in the lower position. The work is held to the pattern with several brads driven through the bottom of the pattern.

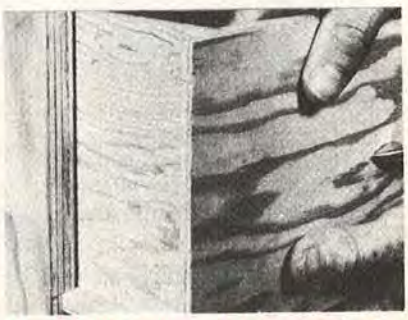

One of the simplest methods of drawer-and-guide construction which can be made with power tools. The drawer slides in slots dadoed intop the ¾" plywood cabinet sides. (American Plywood Assn.)

WORK WONDERS WITH WOOD!

It's easy with master woodworker Rosario CAPOTOSTO as your step-by-step, start-to-finish guide! Mr. Capotosto is a skilled woodworker/craftsman and a prolific how-to writer/photographer who has contributed hundreds of articles to leading handyman publications. His superb step-by-step photos show you exactly how to create and build exciting new furniture projects *and* how to do basic and fine woodworking techniques with ease, accuracy, and an original professional touch, *even if you're a beginner!*

A Popular Science Book
COMPLETE BOOK OF Woodworking
CAPOTOSTO'S
A Popular Science Book
Woodworking Techniques AND Projects
700 PHOTOS · 45 DETAILED PLANS · 100 DIAGRAMS
Your A-to-Z WOODWORKING LIBRARY
More than 840 PAGES
3000 ILLUSTRATIONS
2 superb books by a master woodworker

HOW YOUR CLUB WORKS

First, you get your **$47.90 Capotosto WOODWORKING LIBRARY** along with your **FREE 20-IN-1 SHOP GUIDE** for just $3.95 plus delivery and handling. Send no money. We'll bill you after you receive your books. Then, about every four weeks(14 times a year) you'll receive a colorful Club Member's bulletin describing the coming main selection and a large selection of alternate books also available. In addition, up to 4 times a year, you may receive selected mailings on seasonal and annual products of special interest to the membership, many at giant bargains! If you want the main selection only, do nothing. It will be sent automatically. If you don't want it or want an alternate book, or no books at all, simply indicate your wishes on the handy form that comes with the bulletin and return it to us by the date shown. (No envelope needed.) Club mailings are carefully scheduled to assure you of at least 10 days in which to do this, but in the unlikely event that you don't have 10 days, and you receive an unwanted selection, you may return it at our expense.

You take only the books you want and your only obligation, after accepting your joining books, is to buy just two more selections or alternates *of your choice* within a year. After that, membership may be cancelled by either you or the Club.

GIANT DISCOUNTS! Club books are comparable in every way to the original publishers' editions, yet you may save up to 50% and sometimes more on many special bargains offered throughout the year to the membership. To become eligible for these bargains, mail the attached postpaid card today! *What a great way to build a valuable handyman's library of first-rate books that can really save you time, effort, and dollars in the months ahead!*

Mail attached card today!

If card is missing, write to:

Popular Science Book Club

P.O. Box 2006, Latham, N.Y. 12111

You know how it feels to let strangers work on your house? Well, that's how we feel about outside suppliers cranking out our parts.

And even if we wanted to go that route, who could satisfy us? The accuracy standards for Lufkin measuring tapes are significantly higher than the U.S. government's. Every day our quality-control people cheerfully discard better measuring tapes than most of our competitors sell.

And so we heat-treat our own steels. We mold and plate our own cases. We paint, print and abrasion-coat our own blades.

But as a result, we know what we're selling, and you know what you're buying.

COOPER INDUSTRIES

©1985 The Cooper Group, Inc.

When you want something done right, do it yourself.

CooperTools

The difference between work and workmanship.

BOKER® CRESCENT® LUFKIN® NICHOLSON® PLUMB® TURNER® WELLER® WISS® WIRE-WRAP® XCELITE®

TALKING BACK

Continued from page 12

essary operations using a router: ZAC Products ($89.50, made in both the U.S. and Taiwan) and Reliable Grinding ($399, American-made and of commercial quality). Since then we've learned about another product. Amana Tool sells an excellent ½"-shank set, made in Israel, for $207. Write Amana Tool Co., 1250 Brunswick Ave., Far Rockaway, NY 11691.

● *We also learned of another source for that handy brass dovetail template featured on page 17 of our August issue. It's catalog #108-0002 from the Fine Tool Shops, 20 Backus Ave., Danbury, CT 06810 (or call 800-243-1037 toll-free). Price: $14.95 postpaid.*

LEFT OUT

I am left-handed and find that most hand-held power tools are not designed with lefties in mind. From reading the descriptions of the jigsaws you tested in the June issue, it is apparent that some require, for full control, use of the right hand.

I own a number of power tools, none of which are very satisfactory for lefties. Those with trigger locks require use of the right hand to depress while holding the trigger with the left hand. My router can only be operated right-handed. The steadying handle on my heavy-duty drill is on the left. . . .

Obviously, I have adapted, except to using a push stick with a right hand on my 10" table saw. There is no good reason why safety switches and rotary speed controls cannot be mounted to be equally accessible to the right or left thumb, and trigger locks operate from either side.

—James R. Longstreet, Bedford, Va.

With four southpaws in our shop at WOOD, we're eager to hear from other readers and manufacturers about how lefties can adapt—and about special tools designed for them. We'll report in a future issue. ■

The World's Least Expensive Scroll Saw?

That's right. If you've been considering purchasing a scroll saw, you may have thought you couldn't afford a **HEGNER**. Many of our customers used to think so, too.

But they learned, some of them the hard way, that it costs more to use the wrong tool than to buy one that will do the job right and keep doing it for years and years. In the long run, the best usually costs the least!

That's why more people switch from other makes to **HEGNER** than to any other: **HEGNER** is proven to be the best!

Use the coupon below for free information today!

AMI Ltd. is your source for HEGNER Saws, Lathes and Duplicators; FELDER Woodworking Systems; FLOTT Jointer/Planers and Table Saws; and Lachappelle Workbenches.

Please send me free information on **HEGNER** Precision Scroll Saws.

Name _____

Address _____

City, State, Zip _____

Phone _____

AMI LTD

Advanced Machinery Imports
AMI, Ltd., PO Box 312, Dept. 46
New Castle, DE 19720
302-322-2226

Print this article

The Bulletin Board

Facts, faces, and fables of interest to home woodworkers

NO WORKSHOP? NO PROBLEM!

Atlanta-area woodworkers who lack tools and/or space now can rent a completely outfitted woodworking shop for $13.50 per hour. Cliff McLoud's Rip Guide, Inc., the first of several planned franchise facilities, opened recently in suburban Marietta.

McLoud, an industrial psychologist who took early retirement, came up with the rent-a-shop concept. Rip Guide is an 8,000-square-foot facility with nine 16×16' bays, a 2,000-square-foot assembly area—and $90,000 in new shop equipment. Hobbyists borrow hand tools from a checkout desk and buy wood, hardware, and finishing supplies in a retail section.

Full-time counselors help with problems, but no-knowledge novices get screened out with a skills test to prevent injury. However, they can enroll in a woodworking class.

How is it going at Rip Guide? "Great," says McLoud. "My most enthusiastic renter is a psychiatrist who comes here regularly for his own therapy."

WHEN FORESTERS CRY "WOLF"

In foresters' lingo, a tree with extra branches is called a "wolf tree" because it takes more than its share of nutrients and can breed more of its kind. For the sake of a healthy, productive forest, wolf trees get the ax. So do "leaners," which rub the bark off other trees and make them vulnerable to insect attack, and curved-trunk trees, which can pass this yield-lowering trait to future generations.

WOODWORKER PROFILE: MR. SAWDUST

Who's that under the hat? Three decades of woodworkers know him as "Mr. Sawdust." He smiles at you from magazine ads and at woodworking shows where he demonstrates various fine products.

At home, he's Wallace M. Kunkel, a 63-year-old Missourian (born in New Point, population 50) who delights in woodworking as a hobby. Even as an advertising copywriter for major agencies, Wally maintained a home workshop and built reproductions of antique furniture (he's made a house full). Now he claims the "nation's best" workshop at his Hackettstown, N.J. home.

Wally, known for his skill on the radial arm saw, believes it offers much more to the woodworker than a table saw. "But," says Mr. Sawdust, a "bad radial arm is worse than nothing at all." He has a few thoughts about other subjects, too:

- On electronic tools: "Nonsense. Quality tools don't need electronics."
- On woodworkers: "A lot start out for therapy, then find out they have ability previously unknown."
- On giving advice: "Woodworkers are a lot like farmers—loners by choice. They want to help each other, but can't find a way."

Wally says his goal in life is simple—to get new woodworkers doing age-old joinery perfectly.

By the way, we just had to ask Wally why he always wears his hat, a Missouri-made Stetson: "I began wearing it to keep the sawdust out of my hair. Now, nobody knows me without it."

FAR-EAST TOUR FOR WOODWORKERS

We've heard from *WOOD* consultant Paul McClure about an intriguing tour for woodworkers. Leaving Seattle January 5, 1986, the two-week tour includes veneer plants, timber companies, and exotic lumber mills in the Orient. Tokyo, Hong Kong, Bangkok, and mainland China are featured stops. The all-inclusive price is about $1,994 per person; 120-person limit (deposit deadline Sept. 18), so for full information, write soon to: Travelmore, Dept. W, 940 E. University Dr., Suite E103, Tempe, AZ 85281. Or, call 1-800-348-2540.

AROUND THE NATION

Woodworking/Home Building Show for Craftsmen & Hobbyists. Sept. 13–15. Southfield Pavilion, Southfield, Mich. **Oct. 4–6.** Santa Clara Fairgrounds, San Jose, Calif.

Contemporary Northwest Furniture. To Sept. 15. Boise Gallery of Art, Boise, Idaho.

Fair for Craft Folk. Sept. 14–15. Salem College, Fort New Salem, W. Va. Demonstrations, displays and tool-trading sponsored by SWEAT (Society of Workers in Early Arts & Trades).

The Woodworker & Fiber Artist. Sept. 20–22. Drexel Armory, Philadelphia, Pa. Show and sale.

North American Wildfowl Carving Championship. Sept. 21–22. Holiday Inn and Holidome Center, Bloomfield Hills, Mich.

American Contemporary Works in Wood. Sept. 21–Oct. 20. Dairy Barn, Southeastern Ohio Cultural Arts Center, Athens, Ohio. National exhibition.

Woodworking World Shows. Sept. 27–29. Westchester County Center, White Plains, N.Y. **Oct. 25–27.** O'Hare Exposition Center, Rosemont, Ill. Tools, demonstrations, seminars.

Mid-West Tool Collectors Fall Meeting. Oct. 3–5. Columbus Marriott North, Columbus, Ohio. Seminars, displays, tool-trading for members only.

National Conference on Woodturning. Oct. 9–12. Arrowmont School of Arts and Crafts, Gatlinburg, Tenn. Top turners show techniques, personal styles. Also juried national exhibit.

Southwest Tool Collectors Fall Meeting. Oct. 26–27. Tulsa Marriott, Tulsa, Okla. Seminars, displays, tool-trading for members only. ■

THE ULTIMATE WOODWORKING POWER TOOL . . . . IMPROVED!

FOR YOUR HOME WORKSHOP

TURNS LOW-COST ROUGH LUMBER INTO HIGH-VALUE MOLDING, TRIM, FLOORING and PICTURE FRAMES

MODEL 984

PLANES up to 12¼" wide, up to 6" thick
MOLDS face up to 12" wide, edge up to 6"
SAWS up to 2¼" thick
SELF FEEDS 12' per minute

MODEL 985

PLANES up to 12¼" wide, up to 6" thick
MOLDS face up to 12" wide, edge up to 6"
SELF FEEDS 12' per minute

Well over 50 years of manufacturing and engineering experience have resulted in the New Improved Model 984 and 985 Planers. The same integrity and quality that have made Foley-Belsaw the most sought after planer on the market are still built into every machine and combined with new improved features to put the 984 and 985 Planers a step ahead — THE ULTIMATE WOODWORKING POWER TOOL — IMPROVED.

This versatile power tool will make your home workshop pay off big plus save you both time and money. Never again do you have to depend on lumberyards for stock finished to proper dimensions for your project. The Foley-Belsaw Planer delivers true, smooth wood at the standard power feed rate of twelve feet per minute or at the optional twenty foot rate.

Foley-Belsaw planer operators are making and selling picture frames, fencing, furniture, bed slats and all kinds of millwork for contractors, lumberyards, paint shops, department stores . . . and direct to end-users.

Inexpensive rough sawn lumber converts to the required thickness high value finish stock right in your shop, where you need it, when you need it. The big capacity of the Foley-Belsaw Planer easily handles stock up to 12-3/8" wide and up to 6-1/4" thick. The built-in versatility of this machine also gives you the capability of ripping boards up to 2-1/8" thick and planing and molding them to finished dimension and pattern on the same pass. Unique design allows the saw blade to be placed at any point from side to side on the arbor shaft. Inexpensive molding bits can be used in the center of the planer cutterhead or on either end — while the planer knives still remain precisely installed in the cutterhead!

Crowns, casings, bases, tongue-and-groove, over two hundred custom knife patterns are available from stock. This vast choice of molding knives gives you the freedom and flexibility to produce the exact molding you need from any species of wood. Custom knives are ground from 1/4" high speed tool steel which allows molding to be cut with one knife, speeding installation and eliminating tedious alignments.

Special pattern knives can also be ground to allow you to match any existing patterns or make special moldings of your own design. Just send us a wood sample or drawing for a prompt quotation.

The Foley-Belsaw operates on either 3 HP or 5 HP Electric Motors. 3 HP is normally all that is required for the average home workshop while Foley-Belsaw recommends 5 HP for commercial or heavier duty, continuous applications.

The Only 12" Planer good enough to meet the rigorous standards of the Underwriters Laboratory.

TRY THE MODEL 984 OR MODEL 985
IN YOUR OWN SHOP ON OUR
30 DAY FREE TRIAL OFFER
MAIL COUPON BELOW FOR COMPLETE DETAILS

JUST MAIL COUPON

NO OBLIGATION — **ACT NOW! COUPON BRINGS FULL DETAILS** — **NO SALESMEN**

FOLEY BELSAW

FOLEY-BELSAW CO.
90691 Field Bldg.
Kansas City, MO 64111

☐ **YES**, please send me the FREE INFORMATION that gives me complete facts about your Planer-Molder-Saw and full details on how I can qualify for a 30-Day Free Trial right in my own shop. I understand there is No Obligation and that No Salesman will call.

NAME _____

ADDRESS _____

CITY _____ **STATE** _____ **ZIP** _____

In woodworking, as in life, no one knows it all. But through experience, we all discover—or stumble onto—better, safer, faster, or easier ways to do things. When we devise interesting tips or techniques, we'll share them with you in this column. And when you send us your favorites, we'll pay you $25 for each submission we publish. No shop tips can be returned. Mail your tips to:

Shop Tips
Better Homes and Gardens®
***WOOD* Magazine**
Locust at 17th
Des Moines, IA 50336

All-round dowel storage

Dowels and threaded rods never seem to stay put in their assigned storage nooks. The wooden dowels are apt to warp or break before they are used.

TIP: Cardboard cores from carpet rolls make excellent storage tubes for round material. You can buy the tubes from a local carpet dealer, then cut the tubes to various lengths (try 12", 20", and 30" for starters). Glue and nail wooden disks to a plywood base and then fit the tubes over the disks. The cardboard tubes also can be used between ceiling joists to store the same materials.

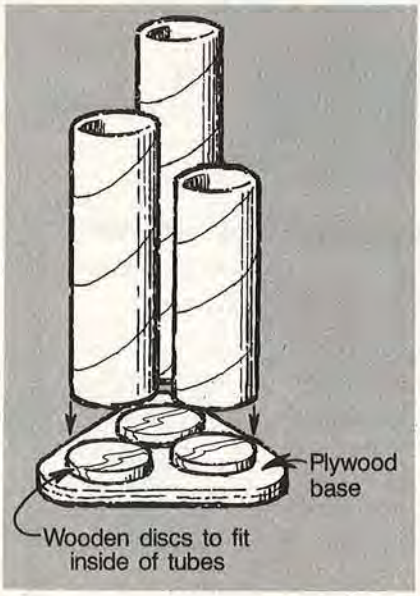

Setting butt hinges

How the dickens do you mortise butt hinges for cabinet doors so they fit right the first time? If you don't routinely hang this type of door, the question can haunt you.

TIP: Start by screwing the hinge in place on the door. Next, use a sharp knife or X-acto knife to score the outline of the hinge before chiseling out the mortise. Then screw the other half of the hinge on the frame edge, marking and routing or mortising out as before. Finally, reinstall the hinge.

Another tip: Because it's so easy to twist heads off brass screws, drill pilot holes about two-thirds the diameter of the screws and lubricate the screws with wax before installing.

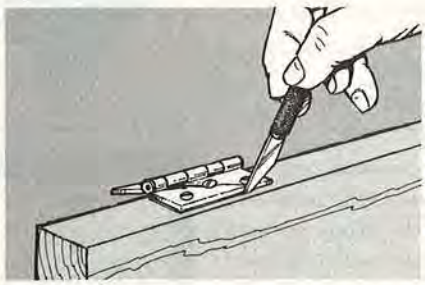

Cushy sawhorses

Because the rough lumber of most sawhorses can mar and scratch a surface, you have to work elsewhere when repairing finished furniture.

TIP: Cut 1×4s or ¾×4" plywood to the length of your sawhorses. Then, cover the strips with scrap carpet and tack the strips to the top beams of the horses with small finishing nails countersunk. Your furniture now gets cushy treatment. Don't forget, however, to clean the carpet occasionally.

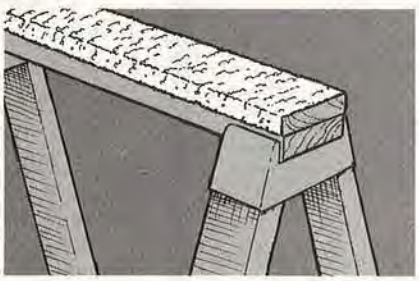

The search is over

Coffee cans and peanut butter jars are ideal for storing nails, screws, and other hardware—but it still takes lots of time to sort through the container contents.

TIP: Cut a large hole from the side of a 1-gal. plastic milk or bleach bottle. Pour the contents of the container through the opening until you find the correct fastener. Use the spout of the bottle as a funnel to return the hardware to the proper container. (The jugs can transport small tools, too.)

—Rev. Daniel Presswood, Menora, Ill.

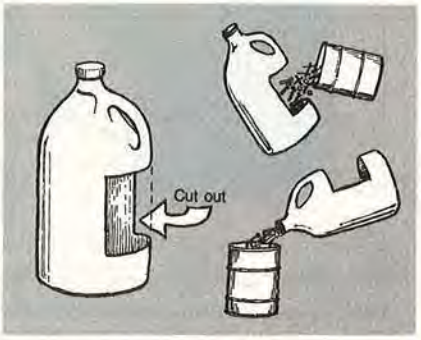

How to win the stain game

You've played this guessing game before—how in the heck is a given stain going to turn out on the particular wood you're using?

TIP: Grab a fairly good-sized piece of scrap or cut-off stock from your project. Sand it smooth, then divide the piece into several sections. As you test stains to see what they really look like (either from your shop paint shelf or from the store—most dealers are happy to share a small sample), identify the type used in each section.

—Bill Blakeney (age 13), Lincoln, Del.

Continued on page 24

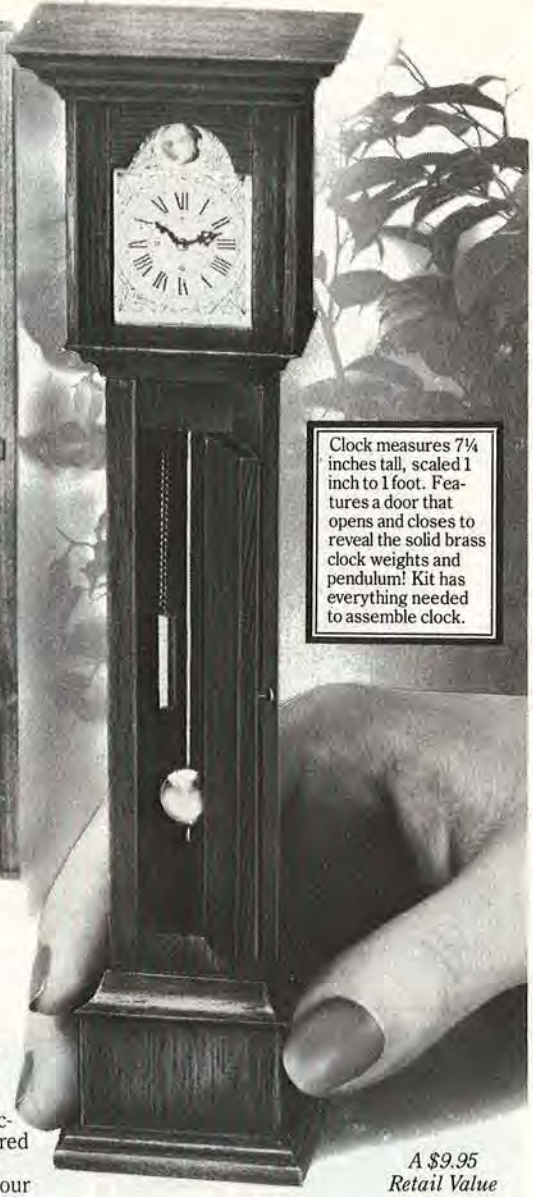

Clock measures 7¼ inches tall, scaled 1 inch to 1 foot. Features a door that opens and closes to reveal the solid brass clock weights and pendulum! Kit has everything needed to assemble clock.

The House of Miniatures invites you to build...

A collection of authentic true-to-scale antique furniture

Experience the personal satisfaction of creating antique *miniature* reproductions with your very own hands. Imagine the thrill of displaying classic Chippendale in your home. Showing off a Hepplewhite dining set or a Queen Anne table. These are among the world's most treasured antiques. Now you can enjoy the timeless beauty and charm of these furniture masterpieces *in miniature*—with our extraordinary museum quality kits.

Each House of Miniatures kit is precision-scaled to 1/12 of the full-size original and cut to exact specifications. Only furniture-quality hardwood is used, and fittings and hardware are of solid brass—finished to fit perfectly. Kits include detailed step-by-step instructions. No special tools or skills are required for assembly.

Begin your collecting adventure with our miniature reproduction of the William & Mary clock kit for only $1 when you become a trial member of The House of Miniatures Collectors Society.

As a trial member, you will have the opportunity to purchase, *if you wish*, other museum quality miniature kits. However, you are not obligated to buy any additional kits—ever!

Remember, this William & Mary clock kit is available for $1 by mail only. *With no further obligation on your part.* Mail coupon today!

A $9.95 Retail Value

Take this museum quality William & Mary Clock Kit for only $1*

with no further obligation

© 1985 Craftmark Inc.

Each kit has fine details

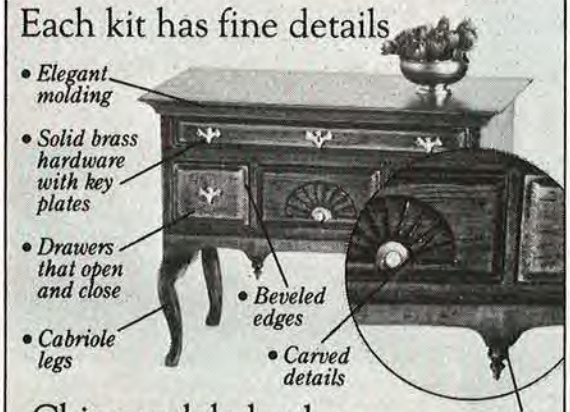

Chippendale lowboy

THE HOUSE OF MINIATURES

Division of Craftmark Inc., 80 Newbridge Road, Bergenfield, NJ 07621

Please enroll me as a trial member of the Society and send me the William & Mary clock kit. Bill me only $1.* If I am not completely satisfied, I may refuse delivery of the second shipment by writing "cancel me" on the shipping label. If I keep the second shipment, I will be a regular member and receive additional shipments every four weeks. Prices for each shipment, which will contain one or two kits, are $9.95* or less. I may return any shipment and I am not obligated to accept any minimum number.

BS09

Mr. ☐ Mrs. ☐
Ms. ☐ Miss ☐ _____

All enrollments are subject to acceptance.

Address_____

City_____ State_____ Zip_____

*Plus shipping, handling and sales tax.

FREE BONUS

Professional Quality Finishing Samples

Include tinted glue, oil base stain (for authentic color), glaze stain for antiquing and highlighting and other materials to professionally finish your kit to museum quality.

CONOVER

Woodcraft Specialties, Inc.
18121 Madison Road, Parkman, OH 44080
216/548-3481

Tradition is Back with

THE CONOVER LATHE SET

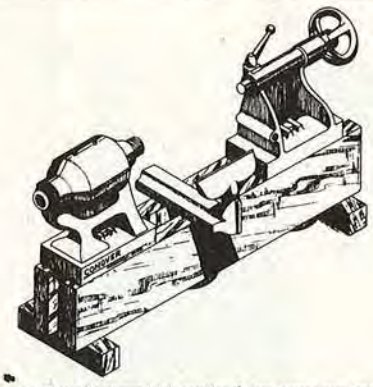

We manufacture the Conover lathe set in our Parkman, Ohio factory to insure its super high quality. It has heavy cast iron construction, precision Timken roller bearings, a 16'' swing, and unlimited center distance. You can set it up as a bowl lathe or turn porch posts—your option!

The Conover Lathe Set is mounted on a bed of 8 quarter timbers, which you can make yourself—to any length. A wood bed absorbs shock better than metal and facilitates an affordable price. Our lathe indexes to 12 positions and is suitable for heavy face plate turning (inboard and outboard), metal spinning, and spindle turning. It has a full range of exciting accessories.

OK Conover,

_____ Enclosed is $1 for your 16-page catalogue detailing the Conover Lathe Set and your entire line of handmade tools.

_____ Send me _____ Conover Lathe Set(s) @ $895 each.

Enclosed is _____ Cheque _____ M.O. _____ MasterCard/Visa

Card #_____ Exp. Date_____

Name_____

Address_____

City_____ State_____ Zip_____

Phone_____

Ken's NEW full scale plans with photos and easy step by step instructions

WoodenMemories

EDITION NO. 5
Grandma's House
(PART ONE)

A child can step into Grandma's old-fashioned kitchen with these scale versions of a real wood cook stove and dining set. The stove has lift off lids, oven with rack, warmer and water reservoir. Table is 26" × 32" and extends to 40" with added leaf.

All plans for
$16.00
PA RESIDENTS ADD 6%

Mailed 3rd Class FREE. For 1st Class postage add $2.50. Canadian orders add $2.50 (U.S. funds).

WOODEN MEMORIES Dept. W Box 490 Russell, PA 16345

TIPS FROM YOUR SHOP (AND OURS)

Continued from page 22

Perfect plywood patch

You need a small piece of AA or AB plywood and all you have in the shop is CD with a knothole.

TIP: Cut a scrap piece of plywood, ⅛" veneer, or resawn solid stock the thickness of the depression to an inch or so longer and wider than the knothole. Lay a piece of carbon paper, carbon side up, over the hole and place the patching piece over it (make sure the wood grain runs in the same direction). Rap the top piece in the middle with a hammer to imprint the knothole onto the scrap.

Cut out the shape, spread glue in the knothole, and press the patch into place. Sand flush.

—Russell E. Price, Barneveld, N.Y.

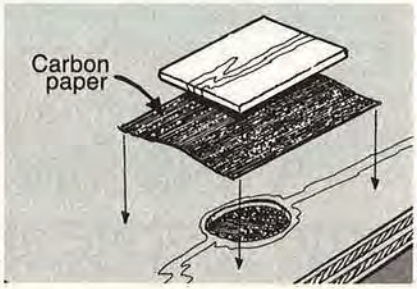

Oversized sanding block

Using a standard-sized sanding block to smooth long, narrow pieces of stock, or panels more than a foot square, produces high or low spots that ruin the appearance of the finished project.

TIP: Tape or glue one-half sheet of standard 9×11" sandpaper to a 3×11" block of wood. This oversized block bridges the high and low areas in the material, similar to the effect of a long hand plane. The masking tape will help protect your fingers.

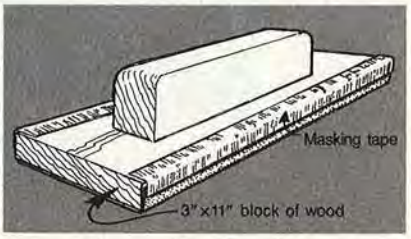

Continued on page 27

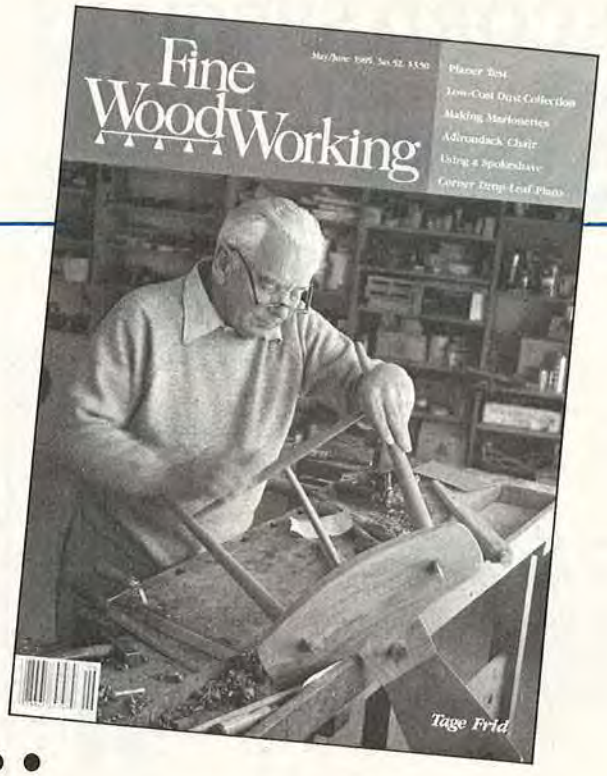

If you love working with wood...

Fine Woodworking is the magazine you've been waiting for. A year's subscription gives you practical, hands-on information you can use on an incredible range of subjects—joinery, turning, carving, veneering, finishing, machines, handtools and any of a hundred other woodworking specialties.

All our articles are written by experienced woodworkers and well-known craftsmen who tell you what they do, how they do it and why. And every article comes complete with helpful, full-color drawings and photographs that take you in close so you can see what's going on. The result is everything a serious woodworker could ask for in a magazine: projects that teach new skills, demonstrations of tools and techniques, new design ideas, old-world traditions, coverage of current woodworking events, and some breathtaking examples of the woodworker's art for inspiration.

What's more, we reserve at least one-quarter of each issue especially for our readers—a place where they can ask questions, air opinions and share jigs, tips, tricks and discoveries with each other.

If you'd like to join them, just fill out the coupon below and send for your subscription today. A year of *Fine Woodworking* (six issues) is just $18, and as always, we guarantee your satisfaction.

For faster service, please use our toll-free number: **1-800-243-7252.**

Yes, I'd like to try *Fine Woodworking*.

Please send me the next issue and bill me just $18 for a year's subscription—five more issues ($21 in Canada, U.S. funds, please). If I'm not completely satisfied, I'll mark my bill 'cancelled' and owe nothing. (The issue is mine to keep.)

Name _____

Address _____

City _____ State _____ Zip _____

☐ Bill me ☐ Payment enclosed ☐ MasterCard ☐ VISA ☐ Am. Ex.

Charge card # _____ Exp. date _____

Signature _____

Send to: **The Taunton Press,** Box 355PWAB, Newtown, CT 06470

RECORD SPECIALS

Record 52E Vise
$49.95 Postpaid

A special purchase of the last production run of this fine, quick-action vise has enabled us to offer it at a remarkable price, making the 52E the most vise for the money in today's market. Supply is limited. Larger size quick-action vises also available below.

VISE	Quick Action	Dog	Jaw Width	Jaw Opening	Weight	POSTPAID PRICE
52E	Yes	No	7"	8"	19 lbs.	$49.95
52½D	Yes	Yes	9"	13"	36 lbs.	$95.00
53E	Yes	No	10½"	15"	38 lbs.	$95.00

Set of 4 Marples Chisels
$19.95 Postpaid

Featuring the same tough and accurately ground blades as found in Marples' famous Blue Chip chisels and large, comfortable handles of select straight-grained ash, these tools are an exceptional value. Set includes ¼", ½", ¾", and 1" widths. Blade length 5"-6". Average overall length, 9".

highland hardware
1045 N. Highland Ave. Dept. B
Atlanta, GA 30306 (404)872-4466

MC/Visa users outside Georgia
ORDER TOLL FREE
(800) 241-6748
(Orders Only)

Or send check, money order, or MC/Visa info to Highland Hardware. Prices are Postpaid in U.S. Send $1.00 for our tool catalog (free with order).

ELEKTRA BECKUM

ELEKTRA BECKUM

LOOKING FOR THE MOST MACHINE FOR YOUR MONEY ??

What is the Best Bandsaw Buy ?

BAS450WRN

Your partner in woodworking, ELEKTRA BECKUM, has the perfect solution: The BAS450 18" Universal Bandsaw.

- 18" Throat with 12" height
- 1.5 HP continuous-duty motor
- 4 speed (260-690-1470-3800 fpm)
- 3/16" Blade width
- 45° Tilting table

All these features for only $1,360 FOB Somerdale, NJ

ELEKTRA BECKUM AT THE HEART OF A GOOD JOB

See the ELEKTRA BECKUM machines demonstrated at these shows:

Detroit	Sept. 13-15
LA-WMFSF	Sept. 19-22
W. Chester, NY	Sept. 27-29
San Jose	Oct. 4-6
Chicago	Oct. 25-27

Call today for your closest dealer
1-800-223-8600
Send $1.00 for full color catalog to:
ELEKTRA BECKUM USA CORP.
P.O. Box 24, Dept. MSO
Somerdale, NJ 08083

It planes, joints, dimensions, shapes, mortises, miters, saws...and saves you money!

The Rex 2000 is a heavy-duty extra-large capacity Jointer-Thickness Planer that can save you money every time you use it...Every Time! You'll never have to pay high prices for finished lumber again. With the Rex 2000, you can turn inexpensive rough stock into perfectly dimensioned workpieces. And, when you're ready to expand your workshop, The Rex is too. Low priced optional attachments give all the advanced capabilities found in professional shops: Slot Mortising, Molding/Shaping and Table Sawing. Find out about the tool that lets you do more...and save more. Call or write Today.

Jointing/Planing Capacity: 10" wide
Power Thicknessing Capacity: 10"×6"

emco☆USA™

Dept. BW95R • 2080 Fairwood Ave.
P.O. Box 07795 • Columbus, OH 43207

SLOT MORTISER MOLDER/SHAPER

Call
1-800-521-8289
In Ohio
614-445-8382

PORTER-CABLE • HITACHI • MAKITA • POWERMATIC • ROCKWELL/DELTA

BLACK & DECKER
COMPOUND MITER SAW

- Compound miter
- 1¼ hp
- Rotating table, 5¼" width of cut
- 2-year warranty

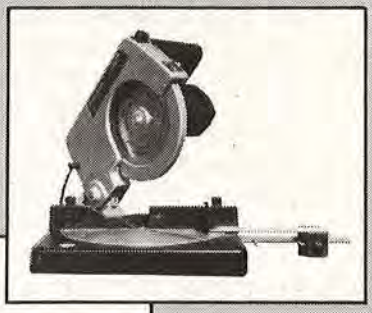

List 278.00
FREIGHT PAID
SALE
$125.00

NAT'L WATTS 800-874-8160
FLA WATTS 800-342-2641

BRATTON MACHINERY & SUPPLY
1015 Commercial St. • P.O. Box 20408W • Tallahassee, FL 32316
Lowest Prices Anywhere! • Visa/MasterCard

MAKITA • POWERMATIC • ROCKWELL/DELTA

Continued from page 24

Quick picker-upper

It's just about impossible to pick up all the brads after you've spilled the box.

TIP: To avoid those frustrating spills, insert a small magnet into the box and grab brads, tacks, or small nails a few at a time. Some magnets are shaped like a pencil and easily clip into your shirt pocket or shop apron.

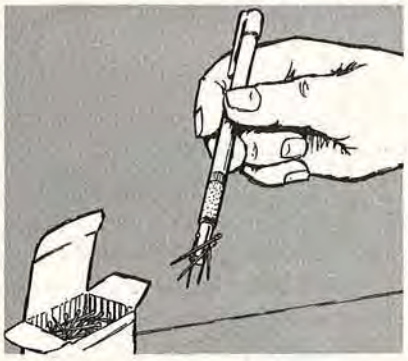

No-strain brush cleaning

Cleaning paint brushes in previously used solvent often stirs up dirty sludge at the bottom of the can.

TIP: Don't throw that used solvent out. You can save by making a basket from screen wire or using a small kitchen strainer to keep your brushes from touching the paint residue. Secure the wire around the lip of the container; the basket should extend at least 3″ into the solvent. To speed the cleaning, scrub bristles against the wire. After you've finished a project, strain the solvent through the wire, rinse the wire, and store the solvent in a clean, covered container. ■

Our catalog doesn't just sell you things. It teaches you things. The Garrett Wade Catalog is a new, 212-page collection of woodworking hand tools, machinery, finishing supplies and accessories that are simply the finest available. Anywhere.

And besides offering quality tools from around the world, we also give you a lot of quality advice. On woodworking techniques. On picking the proper tool for a particular job. On finishing, sharpening, clamping and more.

The catalog is filled with superb photography, honest specifications and reliable descriptions. It's neatly divided into seventeen sections, including a section on our Swiss INJECTA INCA power tools. And throughout the year, our catalog owners will receive several handy supplements–*free of charge.*

Just send in the coupon below with $3.00, and we'll send out your copy of the 1985 Garrett Wade Catalog. It just may prove to be the most useful tool you own.

Garrett Wade Co., Dept. 260
161 Avenue of the Americas
New York, N.Y. 10013

Gentlemen:
Send your complete 212-page catalog of woodworking tools, machinery, and accessories. Enclosed is $3.

☐ I would like *only* the following sections of the catalog, for 50¢ each:
☐ INJECTA INCA ☐ Carving ☐ Finishing

Enclosed is $_____

Name_____

Address_____

City_____

State_____ Zip_____

QUARTZ CLOCK MOVEMENT

An Incredible Special Offer on Our Original Mini-Quartz

$2.00

Additional Quantities— No Limit—$2.99 each

Here's quartz accuracy made in America...at a price that makes the savings incredible! Order your first movement for $2.00 (Shipping and handling included)—save $5.25 off the regular price! Additional quantities are just $2.99 each, plus only 10% for shipping and handling. They're factory-new and guaranteed for 3 years! You'll also get a FREE PAIR of brass hands with every movement (call our toll free number for style of hands available on larger quantities), plus our Color Catalog and "Clockmaking Ideas" pamphlet. Order by mail or telephone. But don't delay...we must have your order postmarked or phoned in by October 30, 1985. Sorry, no foreign or C.O.D. orders. We reserve the right to terminate offer earlier if supply is depleted.

KLOCKIT

Dept. WD95
P.O. Box 629
Lake Geneva, WI 53147
1-800-KLOCKIT

Limited Offer ... Call or Write Today!

Name _____

Address _____

City, State, Zip _____

Credit Card No. _____ Exp. Date _____

"Earth to shop—do you read me?"

If you like to escape to your shop but still want to maintain communication with the rest of the household, try this wireless intercom. Other members of the family will be able to reach you without shouting, and you'll be able to do the same. The intercoms operate on ordinary household current; the FM frequency reduces the interference associated with some wireless models. You can lock the talk bar for monitoring or for hands-free conversations. *Plug 'n Talk, catalog #43-207. $49.95 per pair. Available at Radio Shack stores.*

An E-Zier way to sand

Rudy Sanchez got so tired of sanding the contours of his decoys that he invented a solution. Pneumatic drums in 2", 3", 4", 6", and 8" diameters inflate with a bicycle pump or air compressor to any desired firmness and can match most contours. The drums also adapt to drill presses and Shopsmith units. *E-Z Sander. Prices range from $190 postpaid for kits without the motor to $465 for the model 103A with motor and pedestal (pictured). Inflatable drums available separately for $62–$145. From North West Carving Supplies, P.O. Box 5211, Bozeman, MT 59175.*

Injection suggestion

The tricky part of a good glue job is getting the right amount of glue in the right spot. These two injectors have some of the finest tips we've seen and are especially useful in making repairs in tight spots without mess or additional damage. They're made to last of high-density plastic, too. *10-cc taper-point injector (catalog #178-001), $2.25. 20-cc injector and needle (catalog #178-002), $3.25. Replaceable needles (catalog #178-003) for the larger injector, $2.40. We ordered ours from Woodworker's Supply of New Mexico, 5604 Alameda, NE., Albuquerque, NM 87113.*

Mini, but mighty

Although not intended for heavy clamping, these brass clamps make ideal toys, models, miniatures, and repairs requiring a light clamp. The clamps are imported from Japan. The pair we bought and tested has an open capacity of 11¾"; the depth of the throat is 9/16". Two thumbscrews quickly change the capacity. *Miniature Clamps (catalog #15.650.30), available in pairs for $6.35 postpaid through WOODLINE, The Japan Woodworker, 1731 Clement Ave., Alameda, CA 94501.*

Introducing

TotalAire

The air compressor with power.

Here are just a few of its features:

- ½HP motor puts out 3.3 cubic feet of air per minute.
- 2.6 gallon tank.
- 150 PSI capacity.
- 68 lbs. weight.
- Wheels and handle for easy moving.
- No belts.
- No pulleys.
- Pop-off safety valve.
- Can be used with air tools for spray painting, to pump tires, or to clean woodworking shops, etc.

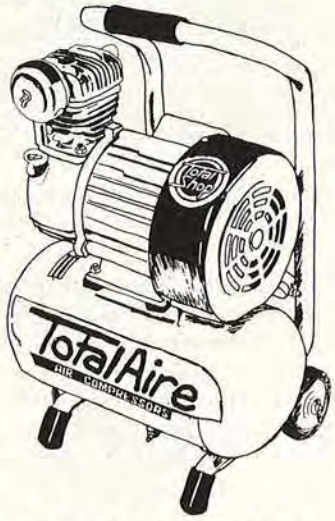

ON SALE NOW.

(Regular $419.00 — **Now $269.00**)

Delivered in continental U.S.

CALL TODAY

toll free

1-800-845-9356

in S.C. call

288-4174

TotalShop®

Dept. Q

P.O. Box 16297/Greenville, S.C. 29606

Your Name _____

Address _____

City _____ State _____ Zip _____

☐ **Total Aire** air compressor

COMPARE Total Shop®

WITH SHOPSMITH.® You'll actually *see* the improvement.

For Example:

1. **1½hp motor develops nearly 3hp while Shopsmith® motor is 1⅛hp developing 2hp.**
2. **Motor can be altered by owner to 220V. Shopsmith® does not have this option.**
3. **In more than 85% of the comparisons, the Shopsmith® machine is priced higher than the Total Shop® machine.**

Let us send you 11 more reasons Total Shop is a better buy.

CALL TODAY
toll free
1-800-845-9356
in S.C. call
288-4174

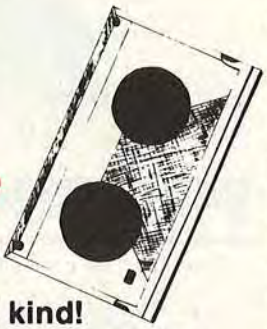

Total Shop® has proudly created an in-home WOODWORKING VIDEO.

- **The first of its kind!**
- **30-min. presentation of the Total Shop and the TS 15-6 Planer.**
- **In-home viewing.**
- **$20.00 refundable deposit.**
- **Available in VHS and Beta.**

Now you can **see** our product at work **before** you buy.

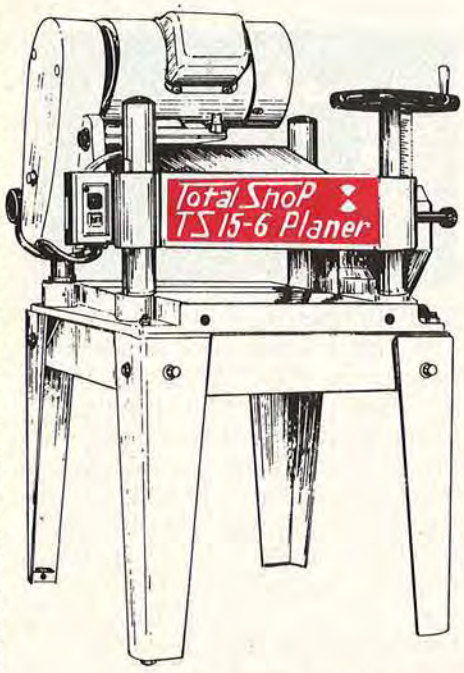

Total Shop®
TS 15-6 Planer

- 110 V or 220 V
- Stand & dust collector available
- 2 HP or 5 HP motor
- 15″ width, 6″ thickness

Attention Shopsmith® Owners:
Call today for our accessory brochure and save money.

clip and mail coupon for: Free Informational Kit

Total Shop®

Dept. Q
P.O. Box 16297/Greenville, S.C. 29606

Your Name _____

Address _____

City _____ State _____ Zip _____

Phone _____

☐ Multipurpose tool ☐ TS 15-6 Planer
☐ Video ($20.00 deposit enclosed)

©United Metal Services, Inc.

RIPSTRATE®

The Finger Saver
That Saves Work . . . .
And Improves the Job . . . .

Most safety devices require frequent adjustment. They usually wind up in a corner, not saving anything at all.

The RIPSTRATE guides the work against the fence. It requires no adjustment. No hands near the blade. No leaning over the saw table. No spoiled stock. NO KICKBACKS. No hassle. Just straight, clean cuts.

No wonder thousands of woodworkers, from amateur and professional craftsmen to large corporations, to government institutions, to colleges, to Air Force bases, now regard the RIPSTRATE as an essential part of their woodworking shops. After all, we are only born with ten fingers.

30 day money back trial. One year guarantee. $62.50 plus $3.50 shipping. Check, M.O., Visa or M/C. Free brochure.

Write or call our toll free number.
800 421 0256

FISHER HILL PRODUCTS
4 Fisher Hill
Fitzwilliam NH 03447

Dealer inquiries invited.

INCA

A Jointer for the Home Shop
INCA Model 410/420 Jointer

Plane a board up to 8⅝" wide. Hand fed **Optional Thicknessing Head** to dimension lumber up to 2⅜" thick. All for less than you might normally pay for an 8" jointer alone.

Part of the complete INCA line featuring **Cast Construction** and our **Five Year Limited Warranty.**

See your **Local INCA Dealer.**

For the name of your INCA Dealer, and a **FREE Brochure,** write to: Injecta Machinery Corp., Dept. 513, 10 Van Dam Street, NY, NY 10013.

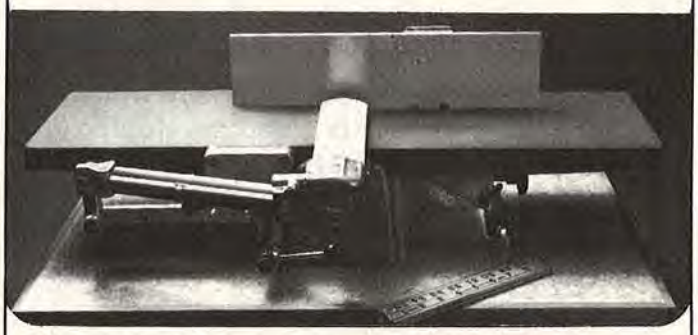

INCA **51 Years of Quality Woodworking Machinery**

PRODUCTS THAT PERFORM

Continued on page 32

First-class finishing wax
You may not have known that #1 carnuba wax from Brazil, often an ingredient in blended waxes, can be applied to wood in a pure form. After adding several coats of carnuba with a buffing wheel, our samples glistened. Carnuba flakes melt at a high temperature and can be mixed with mineral spirits and other waxes to create your own special blend. *Carnuba Wax. One-pound cakes, $7.95 postpaid; one pound of flakes, $6.50 postpaid. Available through Dusty Splinter Enterprises, P.O. Box 3204, Flushing, NY 11386.*

Danish delight
The Scangrind 150 from Denmark is a wet grinder that puts a hollow grind on chisels and plane irons. A reservior keeps the stone continually bathed in water. By moving back the adjustable tool rest, you can sharpen curve-blade tools as well. Additional wheels may be ordered for knives and glass. *Scangrind 150. Available through selected retail and catalog outlets and for $125 postpaid through the importer, F&H Machinery, 2433 Hamilton Rd., Arlington Heights, IL 60005.*

The eliminator
This carbide-wheel wood grinder removes stock in a real hurry. The 4" wheel, developed and handled exclusively by Wood Carvers Supply, attaches to most popular angle grinders and comes with a ⅝" threaded spindle and adapter for ½" spindles. Carbide barbs welded on the wheel are the key to this aggresive workhorse; we ran ours for 45 minutes without loading any material. *Carbide-Wheel Wood Grinder (catalog #265301), $52.50 postpaid from Wood Carvers Supply, P.O. Box 8928, Norfolk, VA 32503.*

RYOBI TOOLS

		List	Sale
S500A	3x5½ Finish Sander	70	41
SU6200	Finishing Sand. ½ Sheet	142	88
B7075	3x21" dustless Belt Sand.	179	116
B7100	3x24" dustless Belt Sand.	208	140
B7200A	4x24" dustless Belt Sand.	269	165
D100VR	3/8"VSR 0-1200 rpm drill	91	49
W640	7¼" 13 amp circular saw	158	99
W740	8¼" 13 amp circular saw	171	109
JS60	Jig Saw-Single Speed	172	99
JSE60	Jig Saw-electronic v/sped	198	123
R150	1 H.P. Plunge Router	138	86
R330	2 H.P. Router	220	138
R500	3 H.P. Router	265	163
E3800	Drywall screwdriver 0-4000	126	79
L120U	3 5/8" Planer	142	89
BD1020R	3/8" 2-spd Cordless Drill w/free holster-Xtra special buy	148	95
TS251U	10" Mitre Box	300	185
SG1150C	4½" H.D. Mini-Grinder	99	59

MILWAUKEE TOOLS

		List	Sale
0224-1	3/8 drill 4.5A magnum	154	109
0234-1	1/2 drill 4.5A magnum	159	115
0244-1	1/2 drill 4.5A magnum	159	115
0222-1	3/8 drill 3.3A 0-100 rpm	139	99
0228-1	3/8 drill 3.3A 0-1000 rpm	129	95
0375-1	3/8 close quarter drill – NEW – 3.5 amp	168	118
0210-1	3/8 cordless drill – NEW – 2 speed	154	114
6539-1	cordless screwdriver – NEW – 190 RPM	84	64
1007-1	½" drill 4.5A D-Hdle	194	145
1107-1	½" drill 4.5A D-Hdle	199	145
3300-1	magnum rt angle drive kit	239	170
3102-1	Plmbrs rt angle drill kit	253	180
1676-1	HD Hole Hawg w/cse 2 sp	323	235
5395	3/8 sgle sp hammer drill kt	203	150
5397	3/8 var sp hammer drill kit	208	155
5371-1	HD mag. hammer drill ½"	287	207
5373	HD mag. ham. drill 3/8"	240	175
6507	TSC Sawzall w/case	184	125
6511	2 speed Sawzall w/case	172	123
6226	port band saw 2 sp w/case	382	280
6234	TSC band saw port w/case	382	280
6365	7¼" circ. saw 13 amp	159	109
6405	8¼" circ. saw 13 amp	179	127
6460	10¼ " " 15 amp w/case	349	245
6377	7¼ HD worm saw 13 amp	235	155
6378	8¼ HD worm saw 13 amp	249	165
6165	12" Chop Saw 15 amp 4200 R.P.M.	267	189
6170	14" Chop Saw 15 amp 3600 R.P.M.	289	209
6255	v/sp Jig Saw 3.8 amp	199	140
6245	sgle sp Jig Saw 3.8 amp	175	125
6287	HD v/sp Jig Saw w/case 2.3	312	225
6012	½ sheet HD Orb. sander	149	110
6014	½ sheet HD Orb. sander	159	115
5935	4" by 24" belt sander w/bag 10 amp	299	215
5900	3" by 24" belt sander 9.5 amp	355	255
5660	1½ HP router 10 amp	256	175
5680	2 HP router 12 amp	314	220
8950	Wet/Dry 8 gal vac 6 amp	138	110

BENCH GRINDERS

4901	¼ HP 2.6 amp 24#	149	110
4921	½ HP 4 amp 26#	169	130
4891	½ HP 4 amp41#	269	195
5041	¾ HP 8.2 amp 58#	369	270

DRYWALL SHOOTERS

6753-1	3.5 amp 0-4000 rpm new	115	79
6747-1	4.5 amp 2500 rpm	144	100
6750-1	4.5 amp 0-4000 rpm	144	100
6751	4.5 amp 4000 rpm	144	100

FREUD SAW BLADES

Univ. Bore — Professional Series
CARBIDE TIPPED SAWBLADES

Item No.	Description	Diam.	Teeth	List	Sale
PS203	Gen'l Purp.	7¼"	24	27.24	17.50
PS303	fine cutting	7¼"	40	32.97	20.50

5/8" Bore — Industrial Grade
CARBIDE TIPPED SAWBLADES

Item No.	Description	Diam.	Teeth	List	Sale
LU72M010	Gen'l Purp.	10"	40	68.58	35
LU81M010	Gen'l Purp.	10"	40	69.30	36
LU73M010	Cut-Off	10"	60	79.65	39
LU82M010	Cut-Off	10"	60	86.40	45
LU84M010	Combination	10"	40	70.99	36
LU84M011	Combination	10"	50	74.51	40
LU85M010	Super Cut-Off	10"	80	110.88	62
LM72M010	Ripping	10"	24	64.85	37
DS 306	6" Dado			139.00	95
DS 308	8" Dado			170.00	107
TR 100	3 blades & Dado set			399.00	255

★ STICK CORNER ★

TITEBOND Wood Glue

Qts = $5.25 Gals = $11.95 5 Gal Pail = $48.95

ELMERS Professional Wood Glue

Qts = $4.10 Gals = $10.95 5 Gal Pail = $44.95

BOSTIK Electric Glue Guns

#203	Standard	11.95	8.95
#206	Solid State	15.95	11.95
#208	Solid State H.D.	22.50	16.95
#212	2" Long — 60 Sticks	5.99	4.25
#219	4" Long — 30 Sticks	5.99	4.25

★ ★ *New* ★ ★

Go Cordless with MILWAUKEE

#6305 – 6¼" Cordless Circular Saw 12 volt — 1 Hour Charge Cuts (80) 2x4's (Pine)

List Price 195.00 ★ SALE PRICE 135.00

MAKITA

Model 2708 — 8" Table Saw

	List	Sale
8" Table Saw	$336.00	$199.95
Holder Set	28.00	23.95
Carbide Blade	19.00	16.95
Table Saw Stand	48.00	39.95
Buy Each Piece Separately		$280.80
or Buy Total Package for		$275.00

Model LS 1400 — 14" Mitre Box

with Bag & Blade

List Price 568 ★ SALE PRICE 398

MAKITA TOOLS

		List	Sale
B04510	Sander	79	43
9900B	3"x 21" belt sander	198	119
9924B	3"x 24" belt sander	204	135
9924DB	3"x 24" b/sand. w/bag	214	130
9035	½ sheet finish sander	79	48
9045B	½ sheet finish sander	156	90
9045N	½ " " " w/bag	170	105
4200N	4-3/8 circ. saw 7.5 amp	152	95
5008NB	8¼ circ. saw 13 amp	178	105
5201NA	10¼ circ. saw 12 amp	348	215
4300BV	v/sp jig saw 3.5 amp	192	120
4301BV	orb v/sp jig saw 3.5 amp	208	125
2401BW	10" mitre saw	319	185
2400BW	10" mitre saw (for vice)	359	249
JR3000WL	2 sp recip saw w/cse	168	120
JR3000V	vs recip saw w/case	178	120
6010DWK	3/8 cordless drill w/case	152	89
5081DW	3-3/8 cordless saw kit	165	109
1900BW	3¼" planer w/case	154	92
1100HD	3¼" planer w/case	278	165
1805B	6-1/8 planer w/case	416	260
3608BK	¾ hp router w/case	132	85
3601B	1-3/8 hp router	198	115
3700B	½ hp trimmer 28,000 rpm	124	82
DA3000	3/8" angle drill	158	105
DP4700	½ v/sp w/rev " 4.8 amp	154	92
HP1030W	3/8 v.s.r. hammer drill w/case	145	98
6300LR	½" angle drill w/rev	229	152
8419 8B-2W	½" 2 sp. hammer drill w/case	238	150
GV5000	Disc Sander	79	53

DRYWALL SHOOTERS

6800DB	2500 rpm 3.5 amp	123	79
6800DBV	0-2500 rpm 3.5 amp	133	89
6801DB	4000 rpm 3.5 amp	123	79
6801DBV	0-4000 rpm 3.5	133	89
2030	12" planer/jointer	1980	1350
2040	15-5/8" planer	1780	1195

NEW *from* MAKITA

9207SPC	7" Electronic Sand/Polish	209	130
DK1001	drill (6010D) charger/vac	178	125
6010SDW	3/8 cordless drill, rev.	82	45
DA3000DW	3/8 angle drill, cordless 700 7.2 volt	172	105

DELTA

		List	Sale
33-890	12" Radial Saw featuring "Turret-Arm" Action	1280	975
33-990	Deluxe 10" Radial saw	589	475
34-621	9" contr. saw w/o motor	500	395
34-410	10" contr. saw w/o motor	871	650
34-710 super	10" motorized saw	579	450
15-091	15" floor model D/press	467	375
15-090	15" bench model "	467	375
37-207	Saw/Jointer Combination	1018	810
37-609	6" Motorized Jointer	413	335
37-290	4" deluxe Joiner w/o motor	346	275
22-651	RC-33 — 13" Planer	1943	1450
43-122	Wood Shaper w/stand and 1 HP Motor	689	495
46-140	11" lathe, gap bed model w/stand w/o motor	407	335
52-483	1 hp motor for #34-621	170	130
82-042	1½ hp motor for #34-410	230	170
62-144	½ hp motor for #37-290	138	105
62-142	½ hp motor for #28-243 and #46-140	121	85

SKIL TOOLS

		List	Sale
551	5½" Circ. Saw 65A	99	75
77	7¼" Worm Saw	240	139
367	6½" Worm Saw	239	149
825	8¼" Worm Saw	270	185
807	7¼" Skilsaw 13A-Super	153	100
808	8¼" Skilsaw 13A-Super	172	110
2016-02	3/8" Cordless Drill complete W/Charger Case & 2 batteries	199	99
3104	10" Band saw 4.2 amp vs	195	150
3102	8¼ Table saw 2hp 10amp	190	145

1985 TOOL CATALOG AVAILABLE

Call Toll-Free 1-800-328-0457 – In Minnesota Call (612) 224-4859

4 WAYS TO BUY: CHECK – MONEY ORDER – VISA – MASTERCARD

SEVEN CORNERS ACE HDW. Inc.

216 West 7th St. • St. Paul, MN 55102 • *Est. 1933*

TOOLS ON SALE™

AMERICA'S LOWEST PRICED TOOLS

★ *PLUS* ★ ... *FREE* ... Freight On Every Item

SUPER SPECIALS! *from* PORTER-CABLE

TWO BRAND NEW PROFESSIONALS

Jigsaws

#7648 Barrel Grip
List 194.50 Sale 129.95

#7548 Top Handle
List 194.50 Sale 129.95

Belt Sander Savings

#337 3x21 with bag
List 181 ... SALE 120

#336 3x21 w/o bag
List 171 ... SALE 112

#361 3x24 w/o bag
List 255 ... SALE 165

#360 3x24 with bag
List 275 ... SALE 175

#363 4x24 w/o bag
List 275 ... SALE 175

#362 4x24 with bag
List 290 ... SALE 185

#503 3x24 with bag
Xtra Hvy Duty-9 amp
List 495 ... SALE 350

#504 3x24 w/o bag
Xtra Hvy Duty-9 amp
List 480 ... SALE 340

DELTA

18" Electronic Variable Speed Scroll Saw ... Model 40601

Standard Equipment: Includes basic machine with steel stand; single phase, 15 volt, solid state electronic controlled, permanent magnet motor; cutting-strokes-per minute digital read-out; back up blade guide; 96 assorted metal and wood scroll saw blades and blade changing tools.

Built-in electronic control:

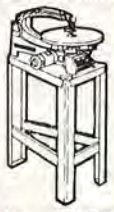

- Cutting 10 1/64" dia.
- Capacity to 2" thick
- Variable Speed from 40 to 2000 CS/M
- Constant blade speed and torque
- Pivoting blade chucks
- 18" cast iron table tilts 30ºL, 45ºR, 15º up, 30º down
- Dry drive
- Ball and roller bearing const.

List ... $1074.00 Sale ... $949.00

★ *X-TRA SPECIALS* ★

MAKITA TOOLS

		List	Sale
6010DL	C/less Drill w/flashlight charger & case	162	90
DP3720	3/8 drill Rev. 0-1800 rpm	88	47
6510LVR	3/8 drill Rev. 0-1050 rpm	114	67
6013BR	1/2" Drill Rev. 6 amp.	174	100
5402A	16" Circular Saw-12 amp	468	315
2414	14" Cut Off Saw-13 amp	262	169
3612BR	3 HP Plunge Router	286	175
9401	4x24 belt Sander w/bag	279	160

PORTER-CABLE

		List	Sale
630	1 HP Router	135	95
691	1½ HP Router D/handle	210	145
698	H.D. Shaper Table	150	105
695	H.D. 1½ hp Router/Shaper	278	190
514	2½ HP Router 12 amp	435	315
399	Drywall Cut-Out Unit	100	70
736	V/Speed *Speedtronic* Band Saw	450	330
7564	½ " X.H.D. Drill 8 amp	205	145

BOSCH TOOLS

		List	Sale
1581VS	Top Handle Jig Saw	225	126
1582VS	Barrel Grip Jig Saw	126	118
1604	1¾ H.P. Router	199	110
90900	Heat Gun 650º — 900º	99	65
1272	3x24" Belt Sander	259	159
1272D	3x24" Belt Sander w/bag	274	169
1273	4x24" Belt Sander	274	169
1273D	4x24" belt sander w/bag	289	179

DELTA

		List	Sale
34-010	Motorized Mitre Box	231	149

★ NEW LOW PRICES ★

PONY CLAMP FIXTURES

Model		List	Sale	Lots of 12
#50	for ¾" Black Pipe	11.23	7.40	80.00
#52	for ½" Black Pipe	9.36	6.10	67.50

JORGENSEN HAND SCREWS

Model	Jaw Length	Open Cap.	List	Sale	Box of 6
#5/0	4"	2"	11.59	7.25	39.15
#4/0	5"	2½"	12.45	8.10	43.75
#3/0	6"	3"	13.35	8.50	45.95
#2/0	7"	3½"	14.35	8.95	48.35
#0	8"	4½"	15.97	9.95	53.75
#1	10"	6"	18.25	11.35	61.25
#2	12"	8½"	20.94	13.50	72.95
#3	14"	10"	26.56	16.75	91.35
#4	16"	12"	34.55	23.75	128.25

JORGENSEN BAR CLAMPS

STYLE 37 — 2½" Throat 1/4" x 3/4"

Model	Jaw Length	List	Sale	Lots of 6
#3706	6"	7.88	5.50	29.70
#3712	12"	8.73	5.95	32.13
#3718	18"	9.64	6.95	37.53
#3724	24"	10.54	7.35	39.69
#3730	30"	11.76	8.25	44.55
#3736	36"	12.85	8.95	48.33

STYLE 39 — 3½" Throat 5/16" x 1"

#3906	6"	18.89	12.95	69.95
#3908	8"	19.45	13.50	72.95
#3912	12"	20.69	14.50	78.00
#3918	18"	22.55	15.85	85.50
#3924	24"	24.45	17.25	93.00
#3930	30"	26.16	18.35	99.00

STYLE 45 — 5" Throat 5/16" x 1 3/8"

#4506	6"	22.49	15.95	86.15
#4508	8"	23.04	16.50	89.10
#4512	12"	23.85	17.50	94.50
#4518	18"	25.16	18.95	102.35
#4524	24"	26.61	20.95	113.15
#4530	30"	28.06	21.95	118.50
#4536	36"	29.54	22.95	123.95

Who Has The Saws That Cut It Across The Board?

BLACK & DECKER of course!!!

Model	WORM DRIVE SAWS	List	Sale
3050	6½" 12 amp - 4600 rpm	247	169
3051	7¼" 13 amp - 4300 rpm	232	149
3052	8¼" 13 amp - 4300 rpm	247	169
	SUPER SAWCATS		
3047-09	7¼" w/brake - 12.5 amp	226	149
3048-09	8¼" w/brake - 13 amp	240	155
	BUILDERS SAW CAT		
3030	7¼" 13 amp - 5800 rpm	155	100
3035	8¼" 13 amp - 5800 rpm	175	125
3034	7¼" 13 amp - 5800 rpm	162	115
3033	6½" 13 amp - 5800 rpm	162	115
	JIG SAWS		
3157-10	var/sp orb action d/hdle	174	115
3153-10	var/speed 4.5A 0-3100	158	105
3159-10	2/sp orb action barrel grip	178	120
	CUT SAW KITS		
3103	2 sp 6 amp-2400 strokes	163	100
3105	V/Sp 6 amp-2300 strokes	170	110
3107	V/Sp orb 6A 0-2300 strokes	183	119
4300	Drill Bit Sharpener	299	205
1321	½" drill 450 rpm 6 amp	175	115
4010	Palm Sander	80	48
4015	½ Sheet Finish Sander	160	105
	DRYWALL GUNS		
2034	v.s.r. 0-4000 rpm	121	79
2037	v.s.r. 0-4000 rpm	139	89

"Door Openers" from MAKITA

9501B	4" Grinder Kit	119	55
6012HDW	Cordless Drill w/Battery & Case	178	98
5007NB	7¼" Circ. Saw	158	94

Brand New • PORTER CABLE

Model 9629 — Electronic Var. Speed

Recipro Saw Kit w/steel case — 8 amp

List Price 199.00 ★ SALE PRICE 129.95

PORTER-CABLE

		List	Sale
314	4½" Trim Saw 4.5 amp	180	112
587	7¼" circ. saw 14.5 amp	199	130
315-1	7¼" circ. saw 13 amp	166	104
368-1	8¼" circ. saw 13 amp	176	119
9548	HD v/s bayonet saw w/case	255	179
648	HD s/s bayonet saw 3 amp	255	169
9627	2 sp. tiger saw kit 8 amp	183	118
505	H.D. ½ sheet finish/sander	165	103
330	spd bloc sander ¼ sheet sz	87	54
304	Professional 7" disc sander	160	105
305	Professional 7" polisher	160	105
7511	3/8"xtra hvy v/s drill 5.2 amp	154	100
7554	½" xtra heavy drill 8 amp	205	135
309	3.8 amp laminate trimmer	120	80
310	3.8 amp laminate trimmer	180	130
312	offset base laminate trim.	195	135
319	tilt base laminate trimmer	205	140
167	block plane 2.5 amp	129	86
9652	Versa-Plane Kit	419	285
9118	Porta Plane Kit	289	195
97650	½" dual range var/speed hammer/drill kit w/case	201	130
518	NEW 3 hp speedtronic 5 spd microprocessor prod/router 10-13-16-19-22,000 rpm	475	320
520	NEW 3 hp production router	435	275
100	7/8 H.P. router	134	87
690	1½ H.P. router	189	128
536	1½ H.P. speedmatic router	295	210
537	1½ H.P. D-Hdle router	310	218
	DRYWALL SHOOTERS		
7544	5.2 amp — 2500 r.p.m.	154	100
7545	5.2 amp — 0-2500 r.p.m.	154	100
7546	5.2 amp — 4000 r.p.m.	149	100

AEG Power Tools

ROTARY HAMMERS

		List	Sale
PHE16RL	3.8 amp 5/8" capacity in concrete	269	175
PH 210	5.2 amp-3/4" capacity in concrete	398	260
PHE 20	Same as above — except var/sp 0-750	418	270
PHD 26	6.3 amp-1" capacity in concrete	495	320
PH 38	7.5 amp-1½" capacity in concrete	549	355

All above complete with cases

✓ Check our low prices on Percussion Carbide SDS Bits

..NEW! FREUD TOOLS NEW!..

Model	TOOL SETS	List	Sale
CM 100	Carvers Mallet	9.90	7.95
CS 106	6 Pc. Carving Set	74.90	58.95
CS 112	12 Pc. Carving Set	139.90	110.95
TT 108	8 Pc. Turning Set	67.90	52.95
WC 104	4 Pc. Chisel Set	29.90	18.95
WC 106	6 Pc. Chisel Set	39.90	30.95
WC 110	10 Pc. Chisel Set	66.90	50.95

• *All Cased In Beautiful Wooden Chest* •

buying from *Seven Corners Hdw.* ... is a good *Rule* to follow

STANLEY

Model		List	Sale
33-116	PL-316 ¾" x 16' Rule	15.95	7.50
33-320	PL-320 ¾" x 20' Rule	16.95	7.95
33-425	PL-425 1" x 25' Rule	18.95	8.95
33-430	PL 430 1" x 30' Rule	20.95	9.95

NRI can show you how to make money repairing small engines!

There's opportunity for the man who can service mowers, garden tractors, chain saws, outboards, mopeds, motorcycles, snowmobiles...

There are 50 million small engines out there, and many are waiting for qualified servicemen to fix them. NRI can give you the training you need to cash in on this opportunity, and you learn at home in your spare time, at your convenience.

Includes 5 HP Engine, Power Generator

You learn by doing with NRI "hands-on" training. NRI's Master Course gives you a brand-new 5 HP Tecumseh engine to work on. Plus a power generator, which generates enough 120-volt AC to keep your house going during outages or give you portable power for weekends and vacations. You learn to diagnose problems, tuneup and adjust, even tear down for valve and ring jobs. And your training includes professional tools like an inductive tachometer, volt-ohm meter, torque wrench, valve spring and ring compressors, complete wrench set, and more... all to equip you for learning and earning.

Choice of Two Courses

NRI's Basic Course puts special emphasis on lawn and garden equipment, teaches you the theory and practice of ignition, lubrications, cooling, and starting systems. Its 30 "bite-size" lessons concentrate on one subject at a time to let you move at your own pace, give you greater clarity and faster learning.

The same teaching techniques give you advanced training on the 45-lesson master course... training in the repair and servicing of a wide range of other motors including generators, industrial equipment, even motorcycles. You learn to service electrical systems, transmissions, clutches, power take-offs, and more.

Exclusive Factory Training

Although not required for graduation, your Master Course includes five intensive days of optional training at the Tecumseh Factory Service School. Here, you'll work with master technicians and instructors, getting first-hand experience in subjects like solid-state testing, transmissions and transaxles, engine teardown, two and four cycle carburetors, magneto theory, troubleshooting, and more. All designed to prepare you for success.

Send for Free Catalog

Find out for yourself how much NRI training can do for you. Send for the free catalog with all the facts, descriptions of each lesson, and factory training curriculum. No salesman will call. Get started on your future today! If coupon has been removed, write to NRI Schools, 3939 Wisconsin Ave., Washington, D.C. 20016.

New! Power generator included!

NRI SCHOOLS
McGraw-Hill Continuing Education Center
3939 Wisconsin Avenue, N.W.
Washington, D.C. 20016

We'll give you tomorrow.

Please rush me the one free catalog I have checked. I understand there is no obligation. NO SALESMAN WILL CALL

For Career courses approved under GI bill ☐ check for details.

- ☐ Small Engine Service & Repair
- ☐ Air Conditioning, Refrigeration & Heating Courses Including Solar Technology
- ☐ Automotive Mechanics Course
- ☐ Appliance Servicing Course
- ☐ Communications Electronics
- ☐ Color TV/Audio/Video Servicing
- ☐ Computer Electronics Including Microcomputers
- ☐ Telephone Servicing Course
- ☐ Locksmithing Course

Name (Please print) Age

Address

City/State/Zip

Accredited by the National Home Study Council 1165-095

PRODUCTS THAT PERFORM

Continued from page 28

Pushing safety

Shop safety procedures can't be overemphasized—and neither can outstanding products that make woodworking a safer hobby. Just how good are these safety devices? Two years ago, *Industrial Design* magazine presented its Design Review Award to Shopsmith for its new safety kit. Earlier this year, the National Safety Council and the National Association of Professional Insurance Agents awarded the same kit one of three product development awards for achievement in consumer product safety.

Now Shopcraft, a division of Shopsmith, is offering a similar package (shown here) that is adaptable to most brands of power equipment. Instead of being clamped to the table with a C-clamp, this feather board comes with an assortment of guides to fit and lock into most table saw miter-gauge slots. Rubberized bottoms on the pair of push blocks grip wood while passing near jointer knives, table saw blades, or other rotary cutters; comfortable, contoured handles on the push blocks and push sticks are designed to exert steady, downward pressure. The kit for Shopsmith users also includes a rip fence straddle that keeps fingers away from the blade while you feed pieces as thin as ⅛".

Shopcraft Safety Kit, about $20 at hardware stores and other power tool retailers. Shopsmith Safety Kit, $24 including postage and handling (local taxes apply) through Shopsmith Inc, 6640 Poe Ave., Dayton, OH 45414. ■

END-OF-SUMMER SAVINGS SPREE!

SAVE 60%!

Stanley Low Angle
Block Plane just $14.95

12° low angle steel plane with 1⅝" wide cutter. Japanned with nickel plated trim. Stanley list, $38.00. **117-0075**
LIMITED QUANTITY

Take any Fine Tool on this page for just $14.95

save up to $20.00
and get a Pocket Flashlight FREE!
with every order for 2 or more tools!

SAVE 25%!

Pocket
MITER MAKER just $14.95

Powerful jaws cut instantly through moldings up to 3/4" wide (1/2" if they're thick or fancy) to make neat, smooth miters for picture frames or cabinet moldings. **100-0675**

just $14.95 pair

HORNBEAM WOOD CLAMPS

Strong, Lightweight, 23¾"

Made of hornbeam and spring steel, with cork lined jaws to prevent marring. Quick action cam can produce 350 lbs. of pressure when fully locked. **300-1154**

LESS THAN 15¢ EACH!

1/4" Shank
SABRE SAW BLADES
100 Blades $14.95

100 assorted blades for cutting metal, wood and plastic. First quality, made in Switzerland and the U.S.A. Stock up while supply lasts – fit all popular sabre and jig saws. **117-1605 LIMITED QUANTITY**

SAVE $4.00

Marples **4 PIECE CHISEL SET just $14.95**

High quality, bevelled edge blades are designed for less binding, better control. The handles are smoothly finished ash. 1/4", 1/2", 3/4" and 1" Sheffield Steel blades. **104-0400**

Accuride
DRAWER OR SHELF SLIDES

Each unit consists of two slides mounted on a 7" wide steel plate. (Cut in half if you prefer separate slides.) Forty ball bearings on each slide provide unparalleled smoothness of movement without jamming, binding, tip or side sway. 13" closed, 22¾" open. 2 units (4 slides). **117-1802 LIMITED QUANTITY**

SAVE $20.00!

Marples
12" BOW SAW just $14.95

The stretcher rail is secured between the cheeks with a mortise and tenon joint. The twisted cord and toggle stick provide tension to hold the narrow blade, and the handles rotate through 360° so the frame will clear your workpiece or bench. A time-tested design. **100-0680, was $34.95, $14.95 while quantities last.**

Heavy Duty **10" DRAWKNIFE NOW $14.95**

Straight blade, for heavy, continuous work. Comfortable hardwood handles. **109-0120, was $17.95**

SAVE $3.00

HURRY! SALE ENDS OCTOBER 15, 1985

the Fine Tool Shops

The Fine Tool Shops, Inc. Dept. **WM05**
Box 1262, 20 Backus Avenue, Danbury, CT 06810

Ship to _____

Address _____

City _____ State _____ Zip _____

CALL TOLL FREE 1-800-243-1037

In Connecticut, 797-0772

Qty.	Item	Prod. #	Price ea.	Total
	Low Angle Block Plane	117-0075	$14.95	
	23¾" Wood Clamps, pr.	300-1154	$14.95	
	100 1/2" Sabre Saw Blades	117-1605	$14.95	
	Accuride Drawer Slides, set/2 (4 slides)	117-1802	$14.95	
	Pocket Miter Maker	100-0675	$14.95	
	12" Bow Saw	100-0680	$14.95	
	4 pc. Chisel Set	104-0400	$14.95	
	10" Drawknife	109-0120	$14.95	
	Pocket Flashlight – **FREE** when you order any 2 or more!			
			Subtotal	
			Shipping/Handling 1st item $2.00 Each add'l item, $1.00	
			CT 7½% Sales Tax	
			TOTAL enclosed	

☐ Send **FREE** Full Color Tool Catalog

☐ Check Enclosed
☐ Charge my ☐ AmExpress ☐ VISA ☐ MasterCard

Account # _____

Exp. Date _____

CARBIDE TIPPED ROUTER BITS
PROFESSIONAL PRODUCTION QUALITY
SPECIAL OFFER — SAVE 50% - 75% BELOW COST
1000's SOLD TO READERS OF FINE WOODWORKING

BEST CUT BEST PRICE	ITEM NO.	DESCRIPTION	RADIUS	LARGE DIAM.	CUTTING LENGTH	PRICE
		COVE				
	#01	1/4" R	1/4"	1"	1/2"	$13.00
	#02	3/8" R	3/8"	1¼"	9/16"	14.00
	#03	1/2" R	1/2"	1½"	5/8"	15.00
		ROUND OVER				
	#04	1/4" R	1/4"	1"	1/2"	15.00
	#05	3/8" R	3/8"	1¼"	5/8"	16.00
	#06	1/2" R	1/2"	1½"	3/4"	19.00
		ROMAN OGEE				
	#07	5/32" R	5/32"	1¼"	15/32"	18.00
	#08	1/4" R	1/4"	1½"	3/4"	20.00
	#11	3/8" RABBETING	Deep 3/8"	1¼"	1/2"	14.00
	#09	1/8" (KERF) SLOT CUTTER		1¼"	1/8"	14.00
	#10	1/4" (KERF) SLOT CUTTER		1¼"	1/4"	14.00
	#12	45° CHAMFER	45° Angle	1½"	5/8"	15.00
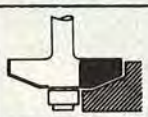	#15	RAISED PANEL	20° Angle	1-5/8"	1/2"	25.00
		DOVETAIL BITS				
	#16	3/8" DOVETAIL 9°		3/8"	3/8"	7.50
	#17	1/2" DOVETAIL 14°		1/2"	1/2"	8.50
	#18	3/4" DOVETAIL 14°		3/4"	7/8"	10.50
		CORE BOX (ROUND NOSE)				
	#19	3/8" CORE BOX	3/16"	3/8"	3/8"	11.00
	#20	1/2" CORE BOX	1/4"	1/2"	11/32"	14.00
	#21	3/4" CORE BOX	3/8"	3/4"	5/8"	18.00
		GROOVE FORMING OGEE				
	#22	1/2" GROOVING OGEE		1/2"	3/8"	16.50
	#23	3/4" GROOVING OGEE		3/4"	7/16"	21.00
	#24	1/4" Straight Bit		1/4"	1"	7.00
	#25	5/16" Straight Bit		5/16"	1"	7.00
	#26	3/8" Straight Bit		3/8"	1"	7.00
	#27	1/2" Straight Bit		1/2"	1"	7.00
	#28	3/4" Straight Bit		3/4"	1"	10.50
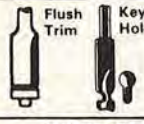 (Flush Trim, Key Hole)	#13	1/2" FLUSH TRIM		1/2"	1"	8.50
	#14	3/8" KEY HOLE (This Bit only HSS)	CUTS 3/8" KEY HOLE FOR FLUSH MOUNTING PICTURE FRAMES, ETC.			8.50

WHEN ORDERING ANY 3 OR MORE, DEDUCT $1.00 EACH
ALL PRICES POSTAGE PAID

- **Professional Production Quality**
- **1/2" Ball Bearing Pilot**
- **1/4" Diameter Shanks x 1¼" Long**
- **One Piece Construction**
- **Two Flute Thick High Quality Tungsten Carbide Tips**

To order by Master Charge or Visa Toll Free
7 Day — 24 Hour Order Service Call
1-800-523-2445 Ext. 56 (in PA 1-800-346-7511 Ext. 56)
or send check to: MLCS, Box 53D, Rydal, PA 19046

Print this article

ASSOCIATIONS YOU SHOULD KNOW ABOUT

MARQUETRY SOCIETY OF AMERICA

Marquetry—also called wood inlay, intarsia, or wood mosaic—involves joining different woods in a freehand design. The craft flourished during the Renaissance and reached its artistic peak following the development of the fretsaw in the 16th century. Then it waned in popularity.

Now, with the advent of very thin veneers and simplified techniques for cutting, gluing, and finishing, marquetry has once again drawn hobbyists' attention. According to Gene Weinberger, president of the Marquetry Society of America (MSA), marquetry is a tabletop pasttime with a future. He feels that current MSA membership of 1,200 in the U.S., Canada, and other countries will surely grow as interest gains momentum.

Formed in 1972, MSA has as its primary goal the promotion of marquetry. The organization also strives to involve craftspersons at all skill levels in sharing knowledge, ideas, and practical techniques. In fact, the Society encourages interchange about all facets of woodworking and has an open offer to exchange speakers for local or national meetings with other wood-related clubs, groups, and associations.

While activity can be found in MSA chapters located in 10 U.S. states and Ontario, Canada, it's centered around the monthly MSA meetings held at Albert Constantine and Son's, a major veneer and tool supplier for marquetry based in the Bronx, New York. Once each year, however, members from all over come together for the MSA convention and marquetry exhibit held in the summer.

Besides the information trading which occurs at meetings and conventions, members share tips and marquetry patterns, problems and solutions, and discoveries of new tools and techniques through a 16-page newsletter distributed monthly (except in July and August). Volunteers contribute answers to specific marquetry questions, send work samples, loan books, explain tool use, and help locate material sources through its pages.

Membership costs $15 ($12.50 each year thereafter). *For more information, write: Marquetry Society of America, Inc., Dept. W, P.O. Box 224, Lindenhurst, NY 11757.* ■

HOW-TO BOOK CLUB

The Best Source for Quality, Service, and Value!

Practical Projects . . . Exciting Ideas . . . and Time- and Money-Saving Tools for Homeowners, Hobbyists, and Do-It-Yourselfers!

Select 5 Books for Only $2.95

Values to $119.75

Join Now, Get a Shop Apron *FREE!*

1844
List $25.95

1425P
List $17.95 (paper)

1909
List $21.95

1784
List $17.95

1238P
List $8.25 (paper)

1321
List $14.95

1971
List $21.95

1638
List $26.95

1554P
List $12.95 (paper)

1030P
List $5.95 (paper)

1546P
List $13.95 (paper)

1639
List $16.95

1801
List $14.95

1188P
List $9.95 (paper)

1046P
List $8.95 (paper)

988P
List $8.95 (paper)

1744
List $23.95

1440P
List $9.95 (paper)

1655
List $21.95

1510P
List $12.50 (paper)

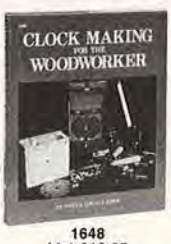

1648
List $16.95

1574P
List $15.95 (paper)

1809
List $22.95

1463P
List $13.95 (paper)

1361
List $18.95

1454P
List $16.95 (paper)

1458P
List $12.95 (paper)

1354
List $15.95

FREE Shop Apron

7 very good reasons to join the How-To Book Club

- **Big Savings.** Save 20% to 75% on books sure to increase your how-to know-how
- **No-Risk Guarantee.** All books returnable within 10 days without obligation
- **Club News Bulletins.** All about current selections—mains, alternates, extras—plus bonus offers. Comes 13 times a year with hundreds of up-to-the-minute titles to pick from
- **Automatic Order.** Do nothing, and the Main selection will be shipped automatically! But . . .if you want an Alternate selection—or no books at all—we'll follow the instructions you give on the reply form provided with every News Bulletin
- **Bonus Books.** Immediately get Dividend Certificates with every book purchased and qualify for big discounts of 60% to 80%.
- **Extra Bonuses.** Take advantage of added-value promotions, plus special discounts
- **Exceptional Quality.** All books are first-rate publisher's editions selected by our Editorial Board and filled with useful up-to-the-minute information.

HOW-TO BOOK CLUB

P.O. Box 8, Blue Ridge Summit, PA 17214

Please accept my membership in the How-To Book Club and send the 5 volumes circled below, *plus,* my FREE shop apron billing me $2.95 plus shipping and handling charges. If not satisfied, I may return the books within ten days without obligation and have my membership cancelled. I agree to purchase 4 or more books at regular Club prices (plus shipping/handling) during the next 12 months, and may resign any time thereafter.

988P 1030P 1046P 1188P 1238P 1321 1354 1361 1425P
1440P 1454P 1458P 1463P 1510P 1546P 1554P 1574P 1638 1639
1648 1655 1744 1784 1801 1809 1844 1909 1971

Name _____

Address _____

City _____

State _____ Zip _____ Phone _____

Valid for new members only. Foreign applicants will receive ordering instructions. Canada must remit in U.S. currency. This order subject to acceptance by the How-To Book Club.

BHGW-1085

Print this article

NEW

Top Handle Variable Speed Bayonet Saw. Made in the U.S.A. with exclusive ball-bearing blade guide system for faster, exceptionally accurate cutting. Adjustable orbit matches blade action to job, while full one-inch stroke cuts production time.

PORTER-CABLE

PROFESSIONAL POWER TOOLS

Porter-Cable Corporation • P.O. Box 2468 • Jackson, TN 38301

WOOD WORDS

Hardwood: Any wood from a botanical group of trees that shed their leaves between growing seasons. The term does not refer to the density or hardness of the wood itself, but includes most species that are dense and hard.
Heartwood: The mature wood at the center of a tree. (See *Sapwood.*)
Inlay: The art of cutting a shallow recess in a wood surface and filling it with wood of another color, species, or grain to form a decorative pattern.
Kiln-drying: Seasoning greenwood in an artificially heated chamber in which temperature and humidity are carefully controlled.
Sapwood: The layer of growing wood between the heartwood and cambium layer (living cells just below the bark). Sapwood is usually lighter in color than heartwood.
Spalted wood: Partially decayed wood with thin figures of irregular discoloration (called *zone lines*) that become evident only when you cut and machine the wood. Spalted wood is frequently turned to produce exceptionally handsome bowls, but its alternating hard/soft texture makes turning a challenge.
Stickers: Lengths of wood that separate the layers in a pile of lumber so that each board receives adequate air circulation during drying.
Veneer: A thin layer of wood that's sliced or rotary-cut from a log with a special bladed machine. ■

WOOD WORDS

Air-drying: Seasoning wood by exposing it to the atmosphere outside or indoors without artificial heat; the suggested formula often is one year of air-drying per inch of wood thickness.
Bird's eye: Small, circular grain patterns that appear on wood surfaces. These are caused by naturally indented wood fibers—the result of aborted bud growth. Rare in any species except sugar maple.
Board foot: A unit of measure for lumber, nominally 1′ long, 1′ wide, and 1″ thick.
Burl: A swirling, twisted figure in wood grain caused by growths on the outside of the tree.
Checks: Splits running along the grain in wood that occur most frequently near the end of a board.
Dressed size: Net dimensions after a board has been surfaced by a planing machine.
End grain: Grain that appears in a cross section of a piece of wood.
Face: The superior side of a sheet of plywood when the outer two plies differ in grade. In lumber, the side chosen for exposure after considering grain, color, and surface condition.
Feather board: A safety device with a series of kerfs cut into one end that holds the workpiece securely while being cut and helps prevent kickback.
Grain: The pattern formed in wood by varying color and density between growth layers or rings.

NEW

Barrel Grip Variable Speed Bayonet Saw. Made in the U.S.A. with identical outstanding, professional features and quality as the Top Handle Bayonet Saw. For more information, call your local Porter-Cable Professional Tool Distributor, or write for free, full-line product and accessory catalog.

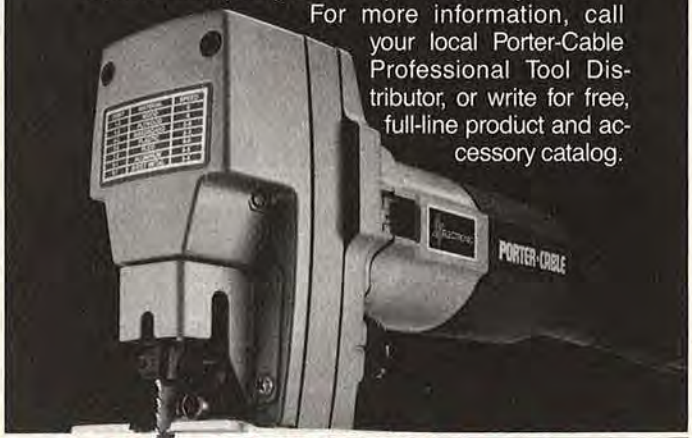

PORTER-CABLE

PROFESSIONAL POWER TOOLS

Porter-Cable Corporation • P.O. Box 2468 • Jackson, TN 38301

BIRCH

The north country's alluring blonde

Mention birch and most people tend to think of the woodland Indians' lightweight bark canoe. But whoa there, partner—for woodworkers, this is the wrong birch!

It was the yellow birch and related species, not the canoeists' white birch, that first charmed colonial New England craftsmen for use in Windsor and Hitchcock chairs. Later on, in the 1920s, a European variety caught the eye of Scandinavian designers of furniture with contemporary flair.

Even into the 1950s, U.S. homeowners looked upon yellow birch kitchen cabinets as the epitome of quality. Today it has yielded in popularity to oak and darker woods.

Wood identification

While up to 50 species of the lanky birch grow around the world, the one you'll find labeled as "birch" lumber and hardwood plywood is most commonly the North American yellow birch *(Betula alleghaniensis)*. Other native species often interspersed and sold with yellow are river birch *(Betula nigra)* and sweet birch *(Betula lenta)*.

Yellow birch, identifiable by its gray to bronze-gray, almost metallic, bark color, grows abundantly in the northern U.S. and Canada. Its range stretches west from Newfoundland to Hudson's Bay on the north and from Minnesota through the Great Lakes states into Pennsylvania on the south. The yellow birch can reach 75′ in height and 3′ in diameter.

Yellow birch

Lumber

Select white veneer

Natural veneer

Sweet birch basically calls New England home, but spreads its roots down into the Alleghenies. River birch likes the bottomlands of the southeast, and can be found west through Missouri and down to the northern part of Florida.

Birch contains very little sapwood—what there is of it appears nearly white. The heartwood color varies from cream to light brown tinged with red and has a distinct but not overwhelming grain pattern. A wavy figure becomes prominent in veneers.

Birch weighs about 43 pounds per cubic foot dry and has great strength, rigidity, and shock resistance. It has low decay resistance, however.

Working properties

Birch's hardness makes working it with hand tools extremely difficult, though it shapes readily with power and machine tools.

This staunchness gives birch high nail- and screw-holding power. It also sands and finishes well, taking paint and varnish admirably. However, birch has a tendency to blotch when stained unless a penetrating sealer is first applied.

Uses in woodworking

Birch takes abuse, and has long been favored for flooring, chairs, chests, tables, and cabinets. While its popularity for furniture has declined, birch's color and toughness still make it a viable alternative to other hardwoods.

Due to its toughness, birch isn't favored for carving. On the other hand, it does turn well and can be used for intricately designed posts, balusters, and furniture legs. Small accessory items—such as dowel rods, shaker pegs, finials, and toy wheels—are usually of birch.

Cost and availability

Birch lumber and plywood, both readily available, cost more than hard maple but less than red oak. You'll pay about $1.65 per board foot for 4/4 stock.

Most birch veneer is rotary-cut, and sold as either "natural" color, which includes heartwood and sapwood, or "select white" from sapwood. ■

Photographs: Hopkins Associates
Illustration: Steve Schindler

Print this article

At Ease

BILL HOPKINS MAKES HIS TIMEPIECES TICK

Bill Hopkins, 60, works behind a camera lens. A free-lance photographer for 36 years, he's taken thousands of shots for publications such as *Better Homes & Gardens®*, *Country Home®*, *Successful Farming®*, and *WOOD*. When he packs away the camera at day's end, Bill relaxes by getting into something nearly as technical: building reproductions of American antique clocks.

We knew what Bill could do with a camera, but we had to see just what goes on in his Des Moines, Iowa, home basement workshop. We asked his son, Bill, Jr., also a professional photographer, to capture our visit on film for you. Bill's wife, Dottie, who loves his clocks as much as he does, put the coffee on while we found out.

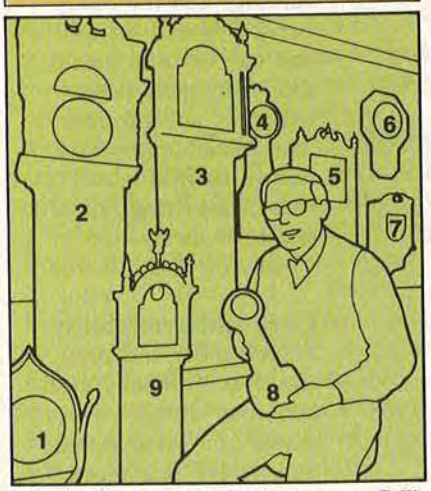

Proudly displayed in his living room, Bill's prized handcrafted clock collection includes: 1. J. C. Brown 1847 acorn clock 2. Early American tall-case clock 3. Aaron Willard 1790 tall-case clock 4. Simon Willard 1808 banjo clock 5. Eli Terry 1817 pillar-and-scroll mantel clock 6. Seth Thomas octagon school clock 7. Pillar-and-scroll wall clock 8. Miniature banjo (dial out for repair) 9. Miniature Willard grandfather with scratch-built wooden movement.

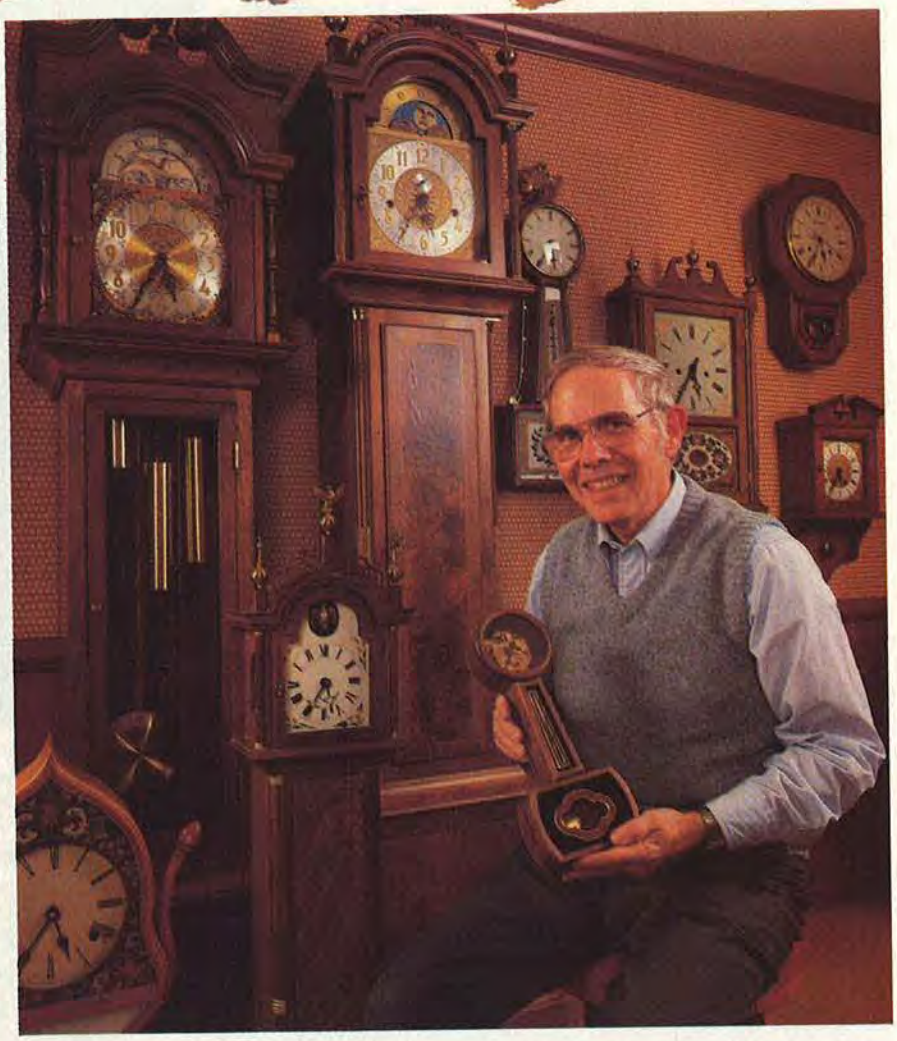

From the curb, Bill Hopkins' home looks much the same as the other neat, two-stories that flank it. Except, maybe, for the 60' ham radio antenna towering above the roof line (Bill was once into radio).

Inside, the home reflects other past and present interests. There's the vast expanse of basement wall hung with laminated, recurve bows, for instance (a reminder of his bow-making days). Then, there's the continual tick-tocking and on-the-hour-chiming of the several dozen clocks that Bill has either built or bought for his collection.

Gearing up for clocks

Bill didn't begin his woodworking with clocks. He started with that necessity of most young married couples—furniture. That was right after WWII when he got out of the armed forces. Later, in 1949, Bill ventured into his own photography business and the need changed to darkroom cabinets. When Bill finally had some leisure time, he started to make things like his first undertaking—laminated archery bows—because he wanted to better understand how they're put together.

for Clocks—

After Bill mastered laminated bow construction in the Fifties, he tackled ham radio. Then, in the Sixties, a housewarming gift of a handsome steeple clock piqued his curiosity about what makes clocks tick.

"It sat there on the mantel looking so elegant that I thought we needed a grandfather clock in the hallway," Bill remembers, "so I looked around to see what was available in kits. Eventually, I ordered plans from Mason & Sullivan for a grandfather clock and a small bracket clock."

Now, those two clocks, built 20 years ago, command an honored position in Bill's collection—one that has grown over the years, as the photo at left indicates.

From a photograph on a museum brochure cover, Bill determined how to build this 1847 J. C. Brown acorn clock of cherry and mahogany. See how he formed the bent-laminate case on page 41.

A matter of authenticity

For Bill, every clock has a distinct personality. "I almost think of a clock as being alive," Bill remarks. "It doesn't just sit there, it does something on its own."

History lives in Bill's clocks, too. Fascinated with American clocks, Bill strives to construct each one as it would have been made originally. By reading about a specific clock and its famous maker before he starts to build, Bill can faithfully duplicate the woods that were normally used, the type of movement, and the details from dial to hand-painted door glass.

Bill has chosen to build clocks from noted designs of past master craftsmen, all of whom were respected clockmakers in late 18th- and early 19th-century New England. These craftsmen include Simon and Aaron Willard, who made stately, tall case clocks and created the uniquely American banjo-shaped clock; Eli Terry, who in 1807 pioneered mass-produced wooden clock movements and made what some aficionados call one of the best-looking clocks ever—the pillar and scroll; and J. C. Brown, the maker of the graceful acorn clock.

The acorn clock

Bill liked the shape of the clock designed by J. C. Brown from the moment he first spotted it in a clock book. The appealing design of the cherry and mahogany laminated case was delightful and intriguing. But since it was maufactured for only two years (1847–1849) there was little information available.

Bill found a good picture of the 1847 model on a museum brochure cover and some limited descriptions in his reference books. Eventally, he arrived at the clock's dimensions

Continued

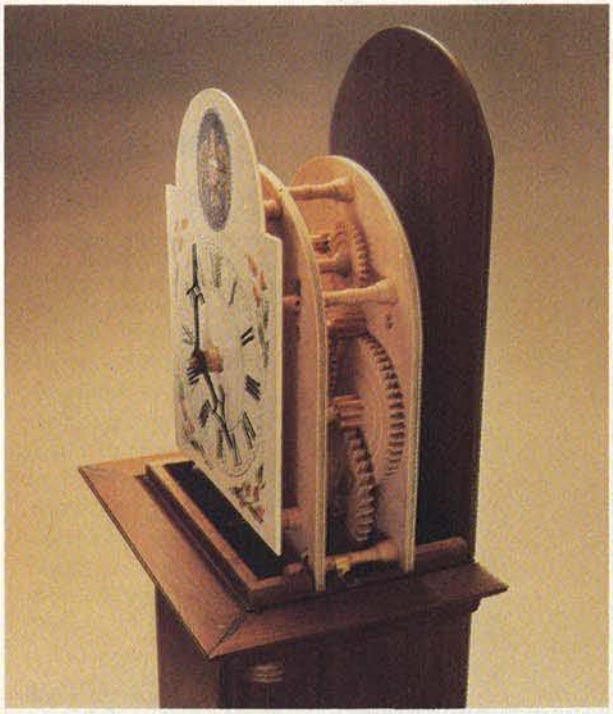

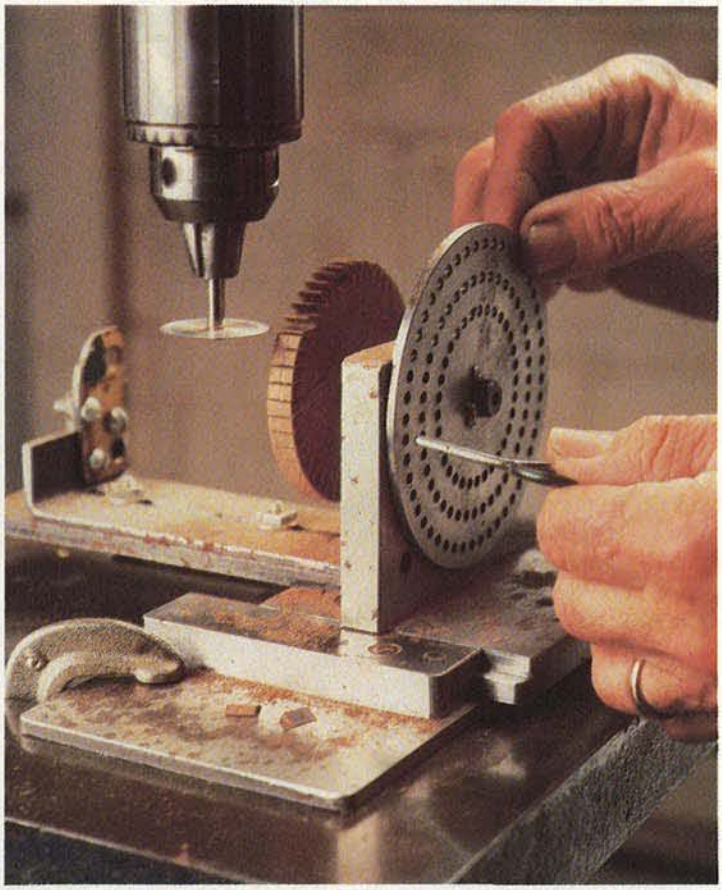

Miniature grandfather clock works is shown *above*. While early clockmakers would have used walnut or a fruitwood, Bill chose stable aircraft plywood for the movement in his miniature grandfather. *At right,* Bill cuts wheel teeth with a tiny blade in the drill press chuck. The dividing wheel fixture locks in the correct spacing for the cuts. *Below right,* Bill's depthing tool is a copy of an antique. Wheels and pinions are mounted, then meshed. The pointers show location of their pivot points in the works.

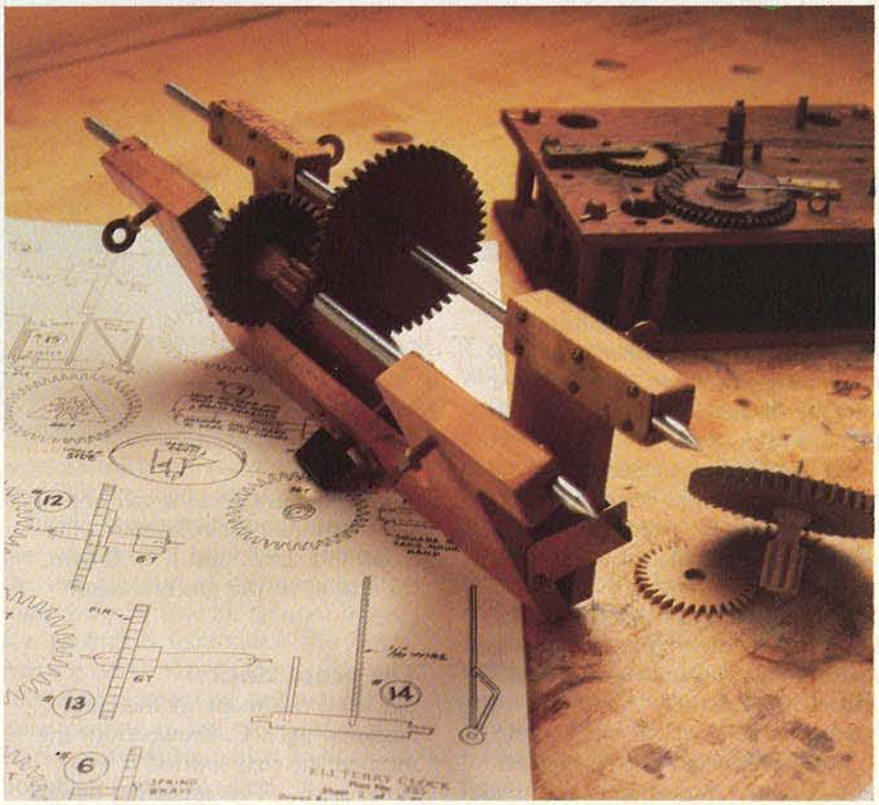

Would you like to build clocks? Horology (the art of making instruments for indicating time) captivates Bill and other members of the National Association of Watch & Clock Collectors, Inc. "Through this group you'll find research assistance," Bill says, "and through member contacts you'll be able to locate parts, diagrams, and specialized services." A museum and library at their Columbia, Pa. headquarters traces over two centuries of watch and clock making. For more information, write: National Association of Watch & Clock Collectors, Inc., Box 33, Columbia, PA 17512.

and the apparent construction details by photographing the brochure picture, then enlarging it to what he estimated was its size from some approximate measurements in his source books.

From the photo enlargement, Bill traced the case pattern (see construction sequence of the case below), measured the laminations and their thicknesses, and pieced together other details. Bill later had the opportunity to see an original J. C. Brown acorn clock. Measuring it, he was amazed to find he had built his replica to within ¼" of the original.

The clock with wooden works

Bill's other "star" is his miniature grandfather clock, patterned after a full-sized one built by Aaron Willard in about 1790. Scaled to half-size, his reproduction is scratch-built. Bill crafted the walnut case, made wooden works of aircraft plywood (it doesn't warp), and had his daughter, Lynn, hand-paint the dial. The only parts not handmade are the hinges, a small wheel, and the virge (pendulum rod).

Bill is proud, to be sure, of the wooden movement. To build it, he had to redesign and adapt plans for a larger clock movement, perfect a fixture to cut wheel teeth, and duplicate a tool used by clockmakers of long ago.

Special help for clock works

When Bill first decided to build a wooden movement for his miniature grandfather clock, he sent away for plans, knowing he would have to scale them down to fit the case.

Instructions with the plans indicated that the movement wheel teeth could be cut with a jigsaw. After several tries, he scrapped that notion—the jigsaw could never be accurate enough. With the assistance of a machinist friend, he devised a dividing wheel fixture that works with a small circular blade in his drill press to precisely cut the teeth (see facing page).

The movement for Bill's clock is based on a portion of an early movement built by Eli Terry. Because Bill's adaptation reduced its size, he had to figure out where to reposition the wheels in the smaller movement so they would still mesh. He made what is called in the trade a *depthing tool* (photo opposite). This allowed him to work backward from the center and correctly position the wheels and pinions in the smaller case.

Pinions, the small dowel-like gears that mesh with the wheels in a clock movement, are first turned on Bill's miniature lathe from 5/16" to ½" birch dowels. After turning them, he uses the dividing wheel on the drill press to cut their six to eight leaves (teeth).

Aside from this specialized equipment—only necessary and helpful if you want to make wooden movements—Bill believes any average woodworker can build clocks. "There's nothing magical about the skills you need. If you can make furniture you can make clocks. Putting a clock together is pretty much a matter of logic."

Forming the Laminated Acorn Clock Case

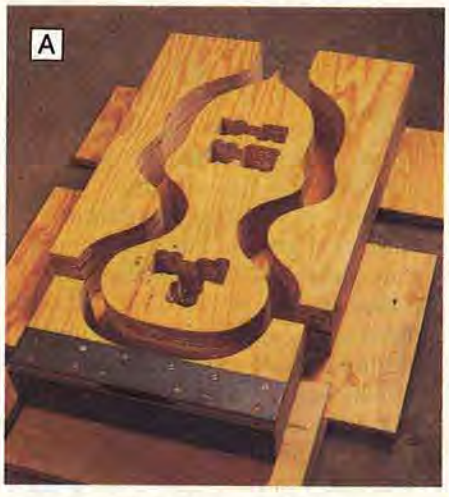

Photo A: For the form, Bill glues up four thicknesses of ¾" plywood, then traces the case shape for cutting on the band saw into the parts shown. The six 1/16×3½×63" strips of cherry and mahogany are first soaked in warm water until pliable, then spread with resorcinol and laid up. **Photo B:** To prevent adhesive from sticking to the form, Bill covers it with aluminum foil. Laminations inserted, forming begins with clamping the bottom piece. The large C-clamp pulls up the bottom piece and starts bending the laminates. **Photo C:** With all form pieces drawn up, the laminates are pressed to acorn shape. A pipe clamp exerts the force needed at top. After drying for a week, Bill removes the case and cuts the excess at the top to a joining bevel. ■

Produced by Peter J. Stephano
Photographs: William Hopkins, Jr.

Print this article

A BEGINNER'S GUIDE TO BASIC WOODCARVING TOOLS

A sharp jackknife and a nice chunk of pine will get you whittling. Woodcarvers, though, use a few more specialized tools, which don't have to cost a lot of money. With the basic set described in this article, you can try your hand at woodcarving, then add more tools later if you like the experience.

Among carvers, whittling means paring away wood from a one-piece, hand-held object with a single tool, usually a knife. With the right kind of knife, you can whittle away a whole bunch of carvings. But you'll find it easier, and less limiting, if you add some specialized tools.

Before we go to these other tools, however, let's look at the all-around favorite carving knife.

A knife that slices, chips, and shaves

Often called a bench knife or a German-style knife, the carving knife shown here fits the hand and its blade won't slam shut on your fingers.

A blade length of 1½" handles most carving cuts—a longer blade bends more easily and becomes harder to control. Blades come in either high-carbon or stainless steel—you'll find that high-carbon steel holds an edge longer while stainless needs frequent resharpening. Even though high-carbon steel tends to rust, it's a better choice.

A German-style knife—its short blade and large handle are ideal.

Handles on this type of knife are normally large enough to ease you through several hours of carving.

Prices for a serviceable knife start at $5 through a carving tool supplier, but you can spend $15 or more for a handmade beauty created by a specialty knifemaker.

X-acto knives make good carving tools, too. For their low cost, they feature sharp, surgical steel blades that you discard when dull. Their handles discourage prolonged carving sessions, but for $2 or less they represent a bargain. This type of knife, and others patterned after it, also come in sets that include an assortment of blades.

Gouges remove wood fast

Gouges do woodcarving's "heavy" work. They cut away wood faster than a knife when roughing out a figure or other carving. Fitted into a wooden handle, the metal shafts of most gouges have a curved cutting edge at the end, which tends to scoop out wood rather than split it. Note the curvature of the cutting edge in the illustration below.

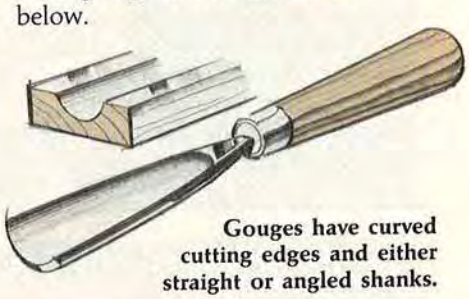

Gouges have curved cutting edges and either straight or angled shanks.

Woodcarving gouges, available in hundreds of shapes and sizes, vary not only in the width of their blades, but also in their curvature or *sweep.* Manufacturers number them accordingly, as depicted in the drawing: *higher numbered gouges indicate a more rounded curvature and therefore a deeper cut.* A No. 1, for example, would be flat and chisel-like. A No. 11 forms approximately a half-circle. The width of their cutting edge, or size, is stated in either inches or millimeters. In addition, the blade will be either straight or curved.

For general use in cutting away wood quickly, a No. 3 or No. 4 straight gouge, ⅜" to ½" wide, works perfectly.

Forged, tempered steel makes the best gouges—less expensive ones are cast. You can detect cast steel by its heaviness and occa-

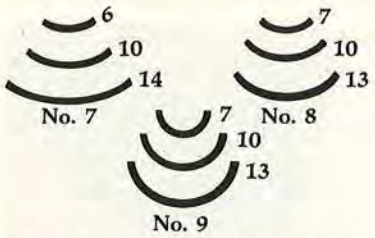

Gouges assigned higher numbers have more sweep to their cutting edge. Numbers to right show width in millimeters.

sional tiny surface pits. Quality handles, normally of hardwood, can be octagonally shaped to prevent rolling in the hand. For long-lasting, well-made gouges, expect to pay from $10 to $15.

Parting tools carve details

Parting, or V-tools, give you the ability to carve outlines, lettering, sharply defined grooves, and detailing such as hair on an animal or human figure.

Like gouges, parting tools come in a variety of widths and have either curved or straight blade shanks. The V-shaped cutting edge can be specified from 45° to 90° of radius, or spread, as illustrated below.

For detailing, a parting tool ⅛" wide with a 60° radius works well. A good one, made of forged steel, costs about $10 or less and should last you for years of continuous use.

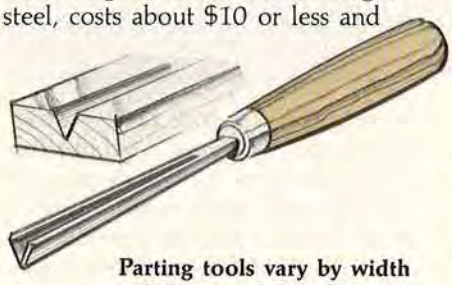

Parting tools vary by width and degree of their V-angle.

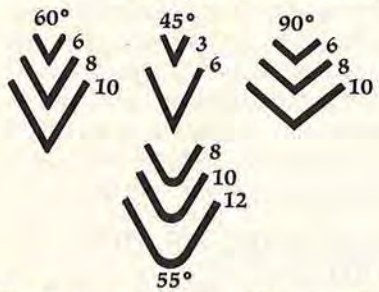

Numbers at right are widths in millimeters. Degree numbers indicate depth and incline of cut.

Selecting your carving tools

Keep in mind what you want to carve when you buy tools. For hand-held, three-dimensional pieces such as figures, gouges and parting tools shouldn't be more than 6" long, including the handle. Often called "palm gouges," these fit nicely into the hand.

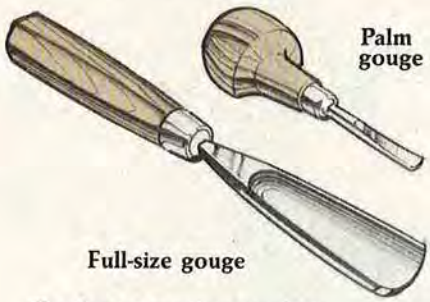

Full-size gouge

For larger carving projects—those that must be clamped down or held in a vise—you'll need full-size gouges and parting tools that have longer handles and shanks. These larger carving tools can withstand the impact of the carving mallet, often used in wood sculpting, whereas the smaller versions cannot.

Carving tools, as you'll discover when you begin shopping, come in gleaming sets of six to 12 tools titled "professional," "intermediate," or "starter," with prices from $25 to more than $100. Avoid the temptation to buy a set. Instead, select your tools individually, then add to them as the need for more specialized ones arise.

For quality tools, you'll pay more, but the difference in cutting efficiency, durability, and comfort makes their initial cost worthwhile. Choose well-balanced tools with good steel—knives with high-carbon blades and forged gouges and parting tools—that feel comfortable in your hand. If you do your shopping by mail (browse this issue of *WOOD* for advertisments of mail-order woodworking tool suppliers with catalogs), you'll have to rely on the company's reputation and the catalog description to ensure quality. A money-back guarantee also helps to combat dissatisfaction.

Taking care of your tools

Even if you have only a few carving tools, taking care of them pays off. Well cared for carving tools not only last longer, but they're always ready when you get the urge to carve. What could stifle your creativity more than having to hone a knife edge before it can bite into the wood?

"Care" applies to three concerns—sharpening, cleaning, and storage. Sharpening, a lengthy topic, will be covered in a future issue. But here are some pointers about the other two categories:

Cleaning. Every month or so, wipe knife blades and gouges with a rag moistened in light machine oil to prevent rust. Handles can be preserved with linseed oil.

Storage. Keep knives and gouges hanging separately behind your workbench. For even more protection, keep them rolled in a soft cloth, pouch-fashion, in a tool drawer. ■

Handmade carving tools

Carver Harley J. Refsal (see Craftsman Close-Up, *WOOD*, April, 1985), who assisted us with this article, touts a set of unique, handmade carving tools he owns. Harley bought some palm gouges from Everett Cutsinger, a Topeka, Kansas, toolmaker, in 1979, and after six years of nearly continuous use the gouges show *no* sign of wear. The secret behind the tools' durability may be that Cutsinger grinds them from quality steel spade drill bits. Harley also says they stay sharper longer than any other tools he's used.

In addition to palm gouges, Cutsinger makes a line of standard gouges, skews, and carving knives—all with walnut handles. He also does custom work, such as fitting a blade to a piece of your favorite wood.

For a free catalog, write: Cutsinger Woodcarving Studio, Dept. W, 525 Horne St., Topeka, KS 66606.

—Written with Harley J. Refsal
Illustrations: Herb Dixon, Jim Stevenson

Print this article

HOW TO RESAW SAFELY

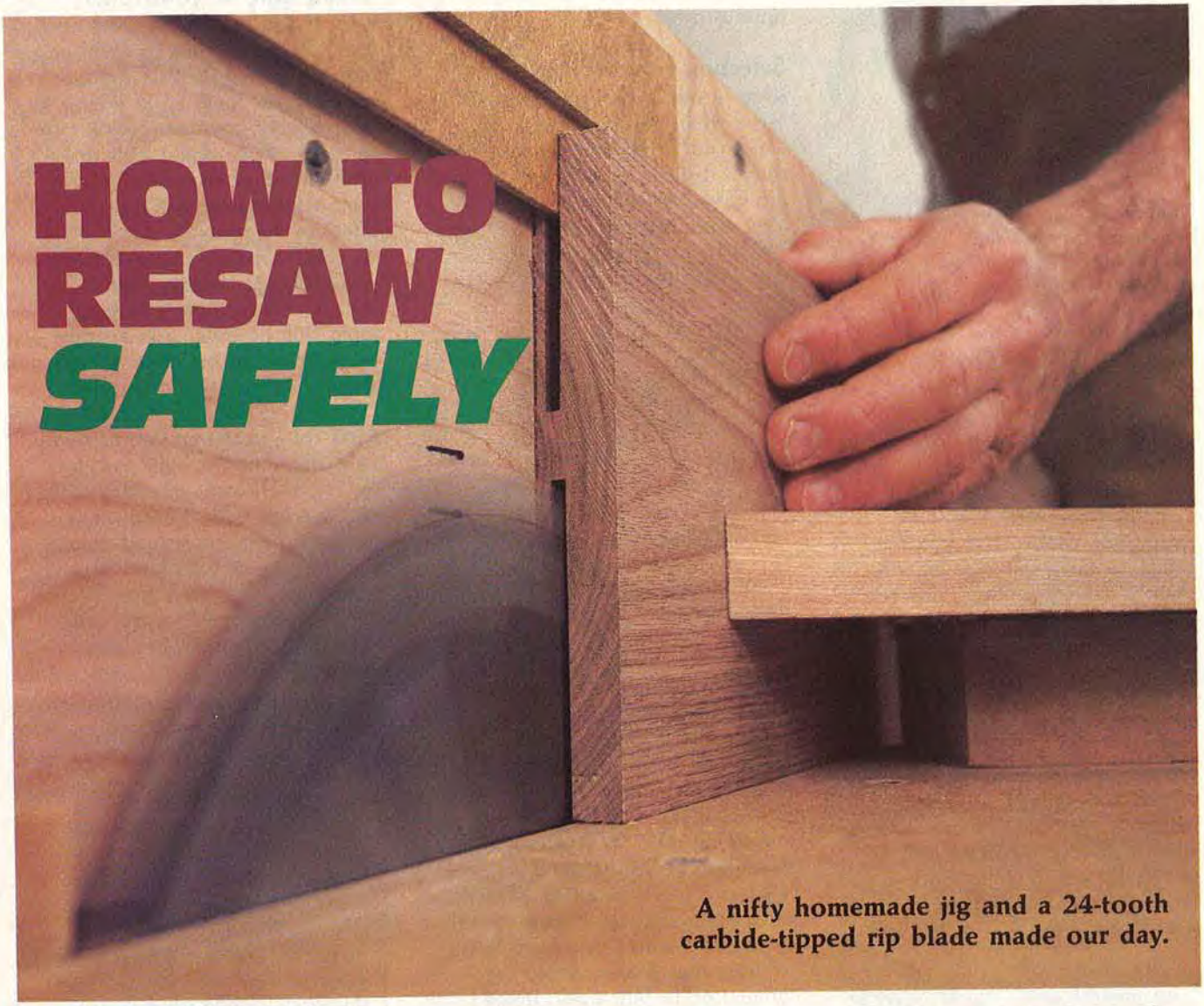

A nifty homemade jig and a 24-tooth carbide-tipped rip blade made our day.

We've been interested in the subject of resawing (making thin stock from thicker material) for a long time—for two reasons, actually. First, many projects, especially smaller-scale ones, require it. And second, thin stock is not something you can just run down to the local lumberyard and get. It's available mainly through mail-order suppliers, and buying anything by mail takes time. (We have been impressed, though, with the three- to four-day turn-around time and the quality of product from several suppliers.)

Resawing also allows you to make good use of those leftovers in your scrap bin. So there's some cost savings involved, too.

RESAWING—TWO WAYS TO GO

Until we began developing this article, whenever we needed to resaw something, we'd head for the band saw. Then, after making the cut, we'd either hand-plane the board smooth or belt-sand it. Now, after several days of testing, we'd opt for cutting the stock on a table saw, with the help of our resawing jig. Why? Because you get a better result more quickly—and with less effort—than with a band saw.

What you see is what you get

Our testing also proved that you don't waste any more material using a table saw blade than you would with a band saw blade, after you factor in the material lost sanding a band-sawn piece smooth. We had thought the opposite was true.

CHOOSE YOUR STOCK CAREFULLY

You've no doubt heard the expression, "Garbage in, garbage out." Whoever coined that phrase must

have done so after trying to resaw a warped board. No matter whether you use a band saw or a table saw, the material must rest *flat* against a fence as it's being cut. So take a good close look at the material you plan to use: If it's warped or twisted, you'll be better off setting it aside and selecting another piece. Also make sure that the stock you're resawing doesn't have any loose knots or other defects that will detract from the finished product.

RESAWING WITH A TABLE SAW

In our search for the best resawing technique, we faced three obstacles. One is the certainty that a circular blade—if you choose the wrong one—will burn the material as the cut is being made. The second, equally troubling problem centers around the fact that if the blade isn't perfectly parallel to the fence and at a right angle to the table, the material may bind and burn, or even kick back. And the third is the flexibility of the resawn stock itself. You have to be able to control the stock before and after it passes through the blade. If you let the material flop around uncontrollably after it's cut, it will brush up against the saw blade and get nicked in the process.

After trying several blades, we settled on a 24-tooth, carbide-tipped rip blade as the best one for resawing. It cuts smooth enough, and the wide spacing between the teeth allows the blade to clear out material easily, making for an easy journey through the wood. We also found that even with sharp blades, it's best to adopt a multiple-pass technique. So we take a 1" bite from the material on the first two passes, then raise the blade ½" or so after that. With exceptionally hard woods, you might be wise to make even shallower cuts.

The resawing jig we developed helped us clear the other two hurdles—keeping the blade parallel to the fence and controlling the stock.

HOW TO BUILD THE RESAWING JIG

The jig shown and dimensioned below has two parts: the base and the fence. For the base, start by making a solid-wood insert (A) to replace the insert in your saw. (You may have to rabbet its bottom side so the insert will rest flush with the surrounding table surface.) Now, cut the base (B) to size, lower the insert into place, and clamp the base to the table.

Start the table saw and raise the blade to its highest setting (this creates the kerf in the insert and base), then shut off the saw. Screw the base to the insert (see Exploded-View Drawing). Then, using a straightedge and pencil, extend the lines of the kerf in both directions.

With a handsaw, lengthen the kerf enough to accept the splitter (this device keeps the stock away from the blade). Also drill a ⅛" hole to accept the 1"-long removable guide pin. Cut the splitter (C) and the pin (D) to size; epoxy the splitter in place.

To fabricate the fence, first cut the base (E), upright (F), and the support braces (G) to size. Cut the slots in and a rabbet at the bottom edge of the upright, and radius its top two corners, if desired. Then, glue and screw these parts together, making sure that the base and the upright meet at a 90° angle.

Cut the upper splitter parts and the spacers (H, I, J) to size, and epoxy the bolts and one of the hardboard spacers to the upper splitter. Notch the remaining spacers. Epoxy two bolts to the upright (these form an easy-access storage rack for the spacers).

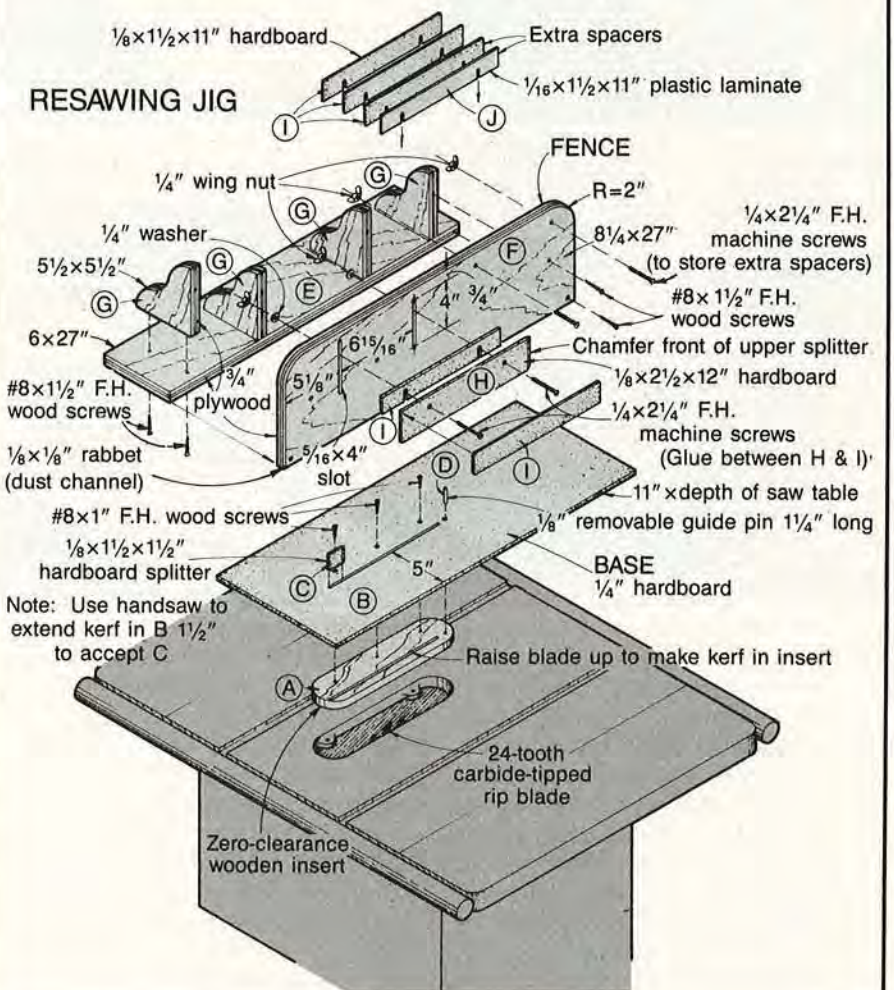

Continued

THE TABLE SAW PROCEDURE

1 Clamp the base of the jig to the table saw, and raise the blade up to its highest setting. Using the appropriate number of hardboard spacers (you can cut stock anywhere from 1/16" on up in 1/16" increments), set the fence the desired distance from the blade. (Be sure that the spacers make contact with the splitter and the guide pin.)

2 Clamp the fence into position, then use a try square or combination square to ensure that the fence is parallel to the blade. You need to check both the front and rear of the fence. If you detect problems (be very precise in your measurements), loosen the clamps slightly and shim as necessary. Adjust the fence until it's correct.

3 Insert the appropriate number of spacers between the upper splitter and the fence, and set up a feather board and kicker arrangement like the one shown. (Position the feather board ahead of the blade slightly and about midway between the top and bottom of the stock.) With the feather board snugged up against the stock and the blade set to make a 1" cut, run the material through the saw, flip it end for end, and run it through again (same face to the fence).

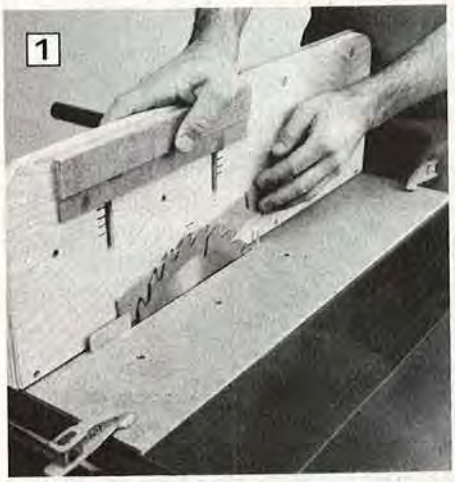

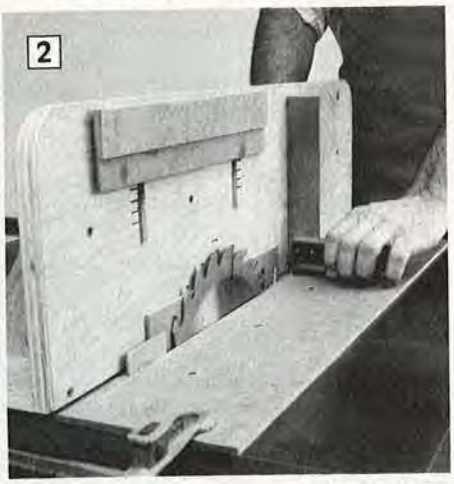

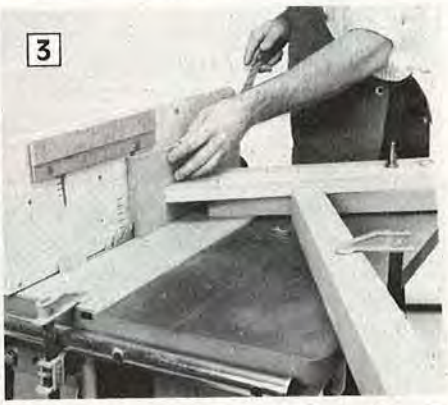

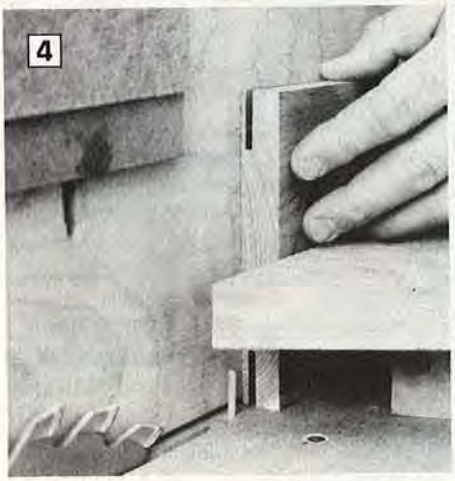

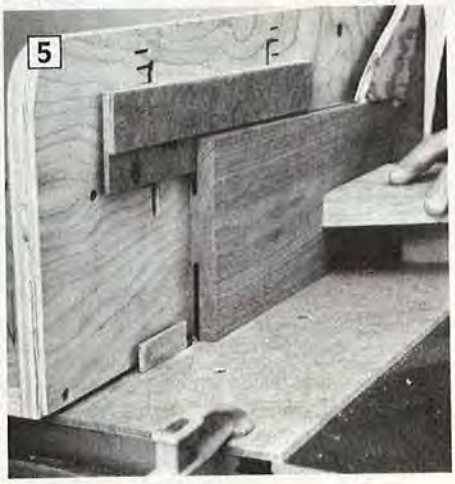

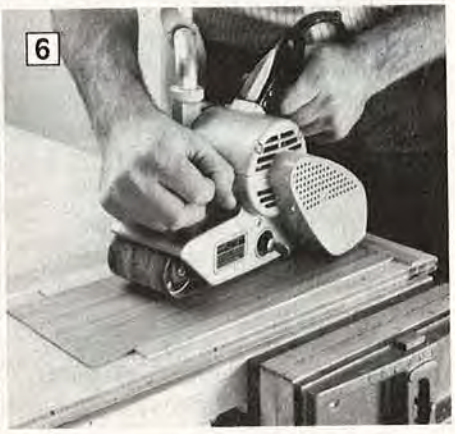

4 Now raise the blade 1/2" (we made reference marks on our jig), insert the guide pin in its hole ahead of the blade, and lower the upper splitter so that it captures the upper portion of the material. As you can see in the photograph, control is being exerted on the stock as it's being fed into the saw. If you didn't have this important element of control, the results would be inconsistent at best.

5 The splitters prevent the blade from gouging the already-resawn portion of the stock as the remainder of the material passes the saw blade. Note also that our hands are safely back away from the blade at all times and that the push stick is being used to feed the material into the table saw. Continue to make as many additional passes through the saw as necessary until you have your thin stock.

6 The surface of the resawn stock will be pretty smooth as it comes from the saw, but you'll have to do some final cleanup with a plane, belt sander, or a surface sander. We've had good results capturing the resawn material on three sides with pieces of scrap stock that are the same thickness as the material being worked, then lightly belt-sanding the latter with 100- or 120-grit abrasive.

RESAWING WITH A BAND SAW

As you can see from looking at the photo on page 44, the band saw produces a cut that's significantly rougher than that generated by the table saw. But if you use the right blade (we like *sharp* ½" blades with three hook-style teeth per inch), set up the machine correctly, and work slowly, you can produce good-quality resawn stock.

Here are some of the problems we encountered during the course of our testing. Knowing about them ahead of time hopefully will save you some aggravation and the expense of wasted stock.

For one thing, the band saw blade tends to wander during resawing. We noticed this tendency when we tried to feed the stock through the blade quickly, when the blade was getting dull, or when the blade guide was not close to the top edge of the stock.

We also found out how important it is to make certain the blade is parallel to the fence. If it's not, the stock will not be uniform.

THE BAND SAW TECHNIQUE

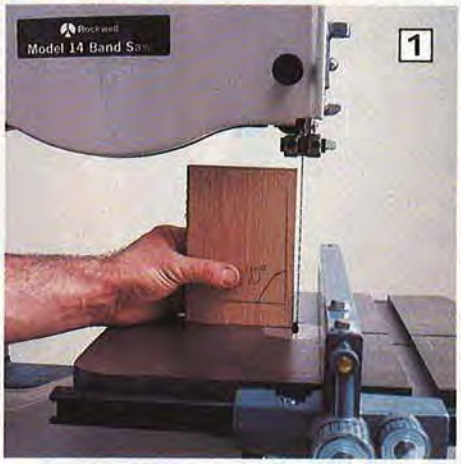

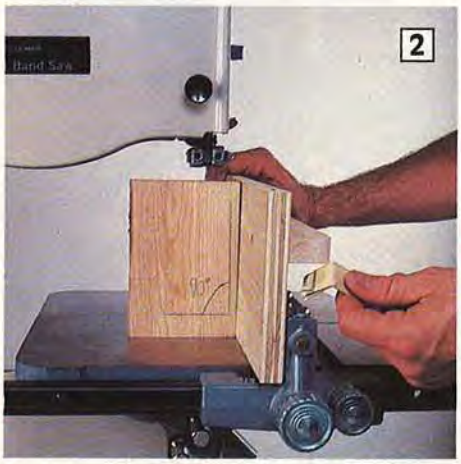

1 Start by cutting a piece of scrap that has a true 90° corner and use it as a benchmark to make sure that the band saw blade is perpendicular to the table surface.

2 Fashion an auxiliary fence from plywood, and secure it to the fence with screws. Notice the stabilizer rail fastened to the auxiliary fence. Check that the fence is perpendicular to the table. If it isn't, shim it into square as shown. Then, move the fence the appropriate distance from the blade. You'll want to cut the stock 1/16" thicker than the finished thickness to allow for sanding.

3 Set up a feather board arrangement like the one shown here, making sure that the feather board is about midway between the top and bottom of the stock. Clamp it to the table ahead of the blade and so that it is snug against the material being resawn. Slowly feed the material into the blade.

4 Use a push stick to complete the pass as the back edge of the material nears the blade. True, it's hard on the push stick, but it sure beats the alternative.

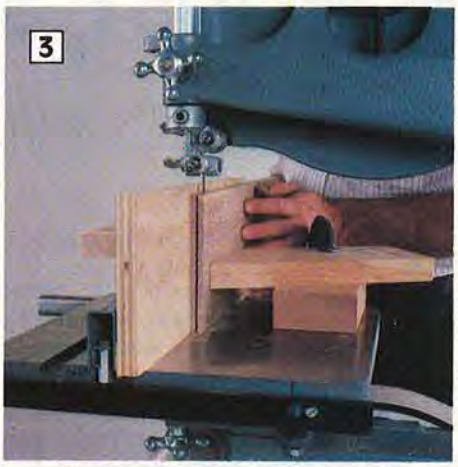

ADVICE FROM A RESAWING PRO

Finding someone to talk to who is knowledgeable about resawing isn't easy, but we were lucky. Linda Davis, Director of Operations of the Sawmill Division, C. F. Martin Company, Inc., and William H. Hall, Product Manager and Sawyer, resaw most of the thousands of board feet of thin stock sold in the United States each year. Here's some of the advice offered during a telephone interview with Linda:

- She suggests using ¾" or 1 1/16" material that's been kiln-dried to 8- to 10-percent moisture content. Green and air-dried wood will warp and twist more often—and more severely—than kiln-dried stock.
- The thinner the resawn stock, the more likely it is to warp. Linda suggests ⅛" minimum.
- Store thin stock flat, and weight down pieces that are warped. They should flatten out.
- On the stability of various woods: exotics tend to be stable after resawing because of their density. Of the domestic woods she has experience with, Linda terms maple unstable; the oaks, walnut, and cherry stable. Quarter-sawn wood yields more stable thin stock than does flat-sawn stock. ■

Photographs: Bob Calmer Illustration: Bill Zaun; Randall Foshee

Print this article

BUILD YOUR OWN SURFACE SANDER FOR JUST $150

With our thickness sander, you can surface your own thin stock in your workshop with catalog-quality results!

Make your own thin stock by resawing thicker boards (see article, page 44), then use this thickness sander to remove the saw marks. The sander also excels at truing up surfaces for cutting boards and other edge-joined projects.

The sturdy maple stand will take years of hard use, and the hood keeps the whole operation practically dust free. The sander adjusts easily and can handle stock up to 2″ thick and 12″ wide.

Materials for this project cost us about $75; the motor was an additional $75 (you could save even more by finding a good used motor).

Note: While several parts of the base are the same size (A and B, for example), we call them out separately because they are mirror images of each other and need to be machined individually. We also found it much easier to lay out the location of the joints *before* cutting to avoid errors.

BUILDING THE BASE

1 Rip and crosscut the feet (A, B), legs (C, D, E, F), top braces (G), and rails (H, I) to size.

2 Using the Parts-View and Exploded-View Drawings, lay out and mark the dadoes, rabbets, notches, and half-lap joints on pieces A, B, C, D, E, F, G, and H. (Since B is the mirror image of A, clamp A to B, and mark both pieces at the same time for uniformity. Mark C and E, and D and F the same way.)

3 Using a saw fitted with a dado blade, cut the joints as marked. Make all identical cuts at the same time to ensure accuracy and to avoid having to reset the saw unnecessarily.

4 Glue and clamp the right-hand assembly (A-C-D-G) together as shown in the Exploded-View Drawing. After the glue dries, locate and mark the center of each half-lap joint, then drill a ¾″ hole through each, backing the workpiece with scrap to prevent chip-out. Apply glue and insert a ¾″ walnut dowel 1¾″ long into each hole. Repeat this with the left-hand assembly (B-E-F-G) and sand the dowels flush after the glue dries.

5 Mark and cut a 2″ radius on the top ends of A and B, and a 3″ radius on the top corners of both leg assemblies. Cut the ¼″ relief on the bottoms of A and B.

6 Clamp H and I in position to join the leg assemblies. Mark the edges of H and I that will be

Instructions continued on page 51

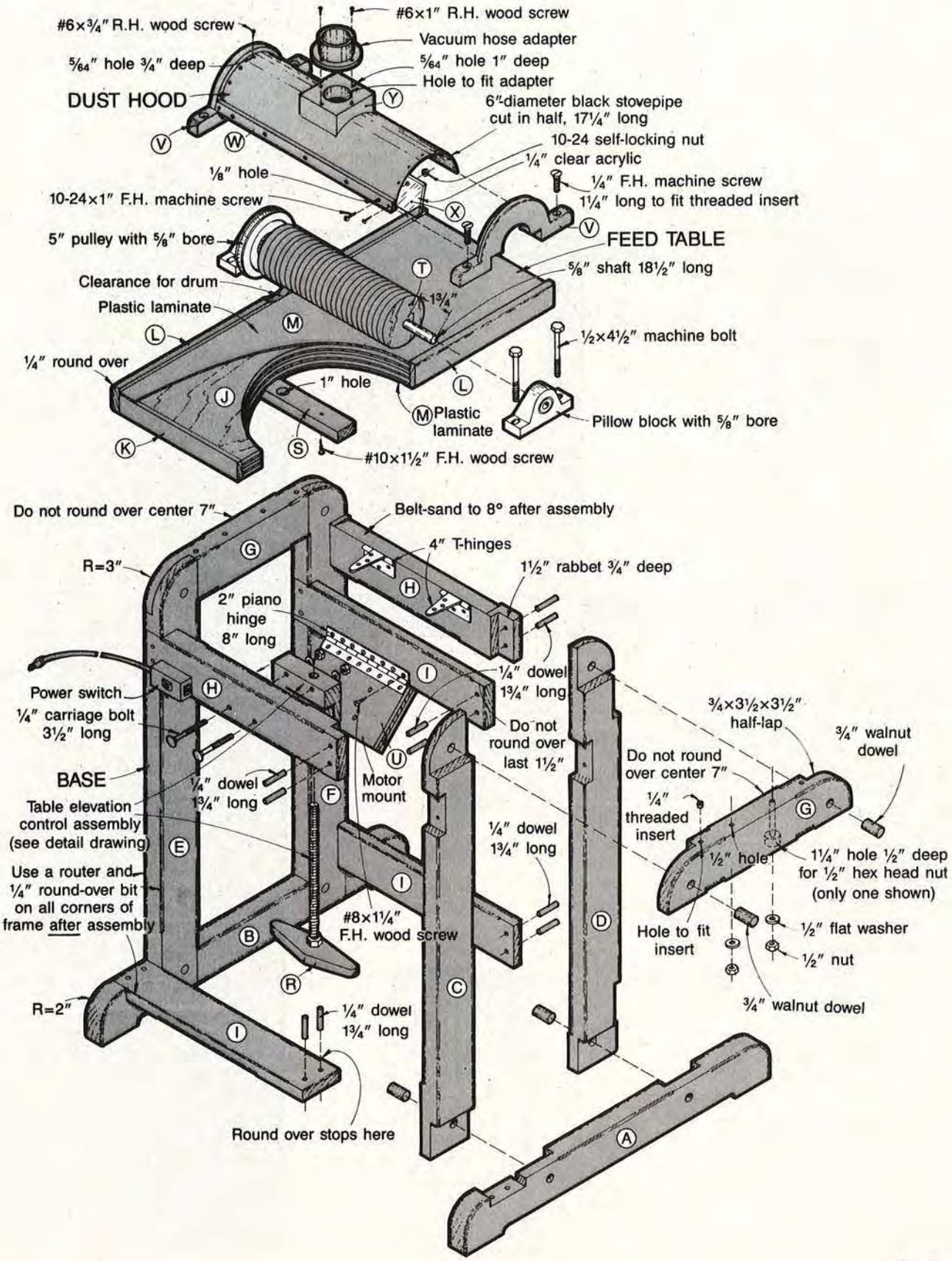
#6×¾" R.H. wood screw
#6×1" R.H. wood screw
Vacuum hose adapter
5/64" hole ¾" deep
5/64" hole 1" deep
Hole to fit adapter
DUST HOOD
Y
6"-diameter black stovepipe cut in half, 17¼" long
10-24 self-locking nut
¼" clear acrylic
⅛" hole
¼" F.H. machine screw 1¼" long to fit threaded insert
10-24×1" F.H. machine screw
V
W
X
V
FEED TABLE
5" pulley with ⅝" bore
⅝" shaft 18½" long
Clearance for drum
T
1¾"
Plastic laminate
M
L
½×4½" machine bolt
¼" round over
1" hole
J
L
M Plastic laminate
Pillow block with ⅝" bore
K
S
#10×1½" F.H. wood screw
Do not round over center 7"
Belt-sand to 8° after assembly
4" T-hinges
G
R=3"
1½" rabbet ¾" deep
H
2" piano hinge 8" long
¼" dowel 1¾" long
I
Power switch
H
¼" carriage bolt 3½" long
Do not round over last 1½"
¾×3½×3½" half-lap
¾" walnut dowel
BASE
U
Motor mount
Do not round over center 7"
¼" dowel 1¾" long
F
¼" threaded insert
Table elevation control assembly (see detail drawing)
E
¼" dowel 1¾" long
G
½" hole
1¼" hole ½" deep for ½" hex head nut (only one shown)
Use a router and ¼" round-over bit on all corners of frame after assembly
I
#8×1¼" F.H. wood screw
D
Hole to fit insert
½" flat washer
B
½" nut
R
C
R=2"
¼" dowel 1¾" long
¾" walnut dowel
I
Round over stops here
A

Continued

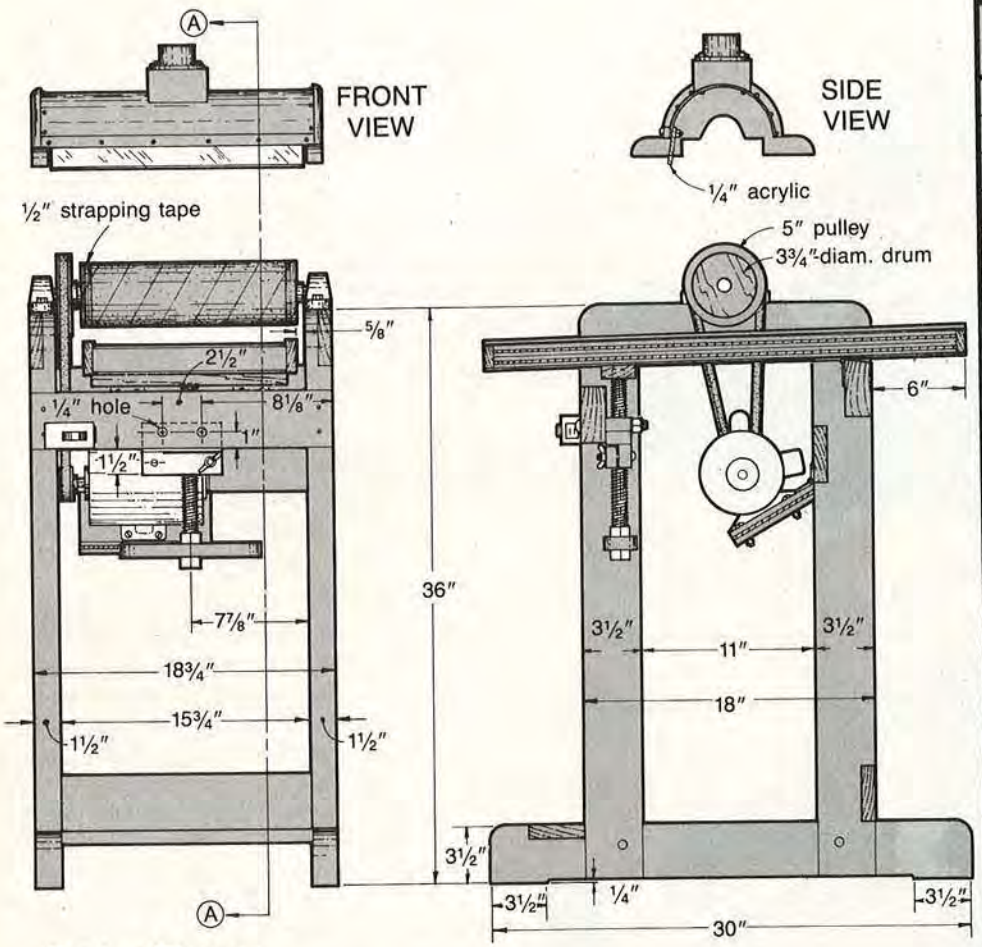

Cutting Diagram

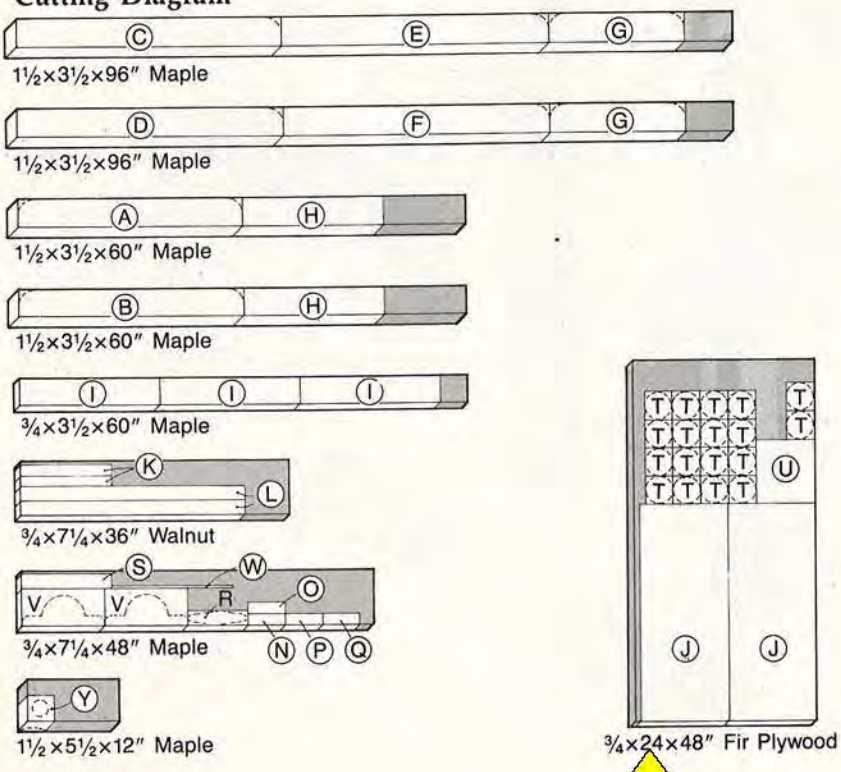

Bill of Materials

Part	Finished Size*			Material	Qty.
	T	W	L		
A	1½"	3½"	30"	maple	1
B	1½"	3½"	30"	maple	1
C	1½"	3½"	35¾"	maple	1
D	1½"	3½"	35¾"	maple	1
E	1½"	3½"	35¾"	maple	1
F	1½"	3½"	35¾"	maple	1
G	1½"	3½"	18"	maple	2
H	1½"	3½"	18¾"	maple	2
I	¾"	3½"	18¾"	maple	3
J*	¾"	12⅛"	29"	plywood	2
K	½"	1½"	12⅛"	walnut	2
L	½"	1⅞"	30"	walnut	2
M*	1⁄16"	12⅛"	30"	plastic laminate	2
N	¾"	1½"	5"	maple	1
O	¾"	1½"	5"	maple	1
P	¾"	1½"	5"	maple	1
Q	¾"	1½"	5"	maple	1
R	¾"	2"	8"	maple	1
S	¾"	2"	12"	maple	1
T	¾"	3¾" diam.		plywood	18
U	¾"	8½"	8"	plywood	1
V	¾"	5"	11"	maple	2
W	⅜"	¾"	17¼"	maple	1
X	¼"	2¼"	15"	acrylic	1
Y	1½"	3½"	3½"	maple	1
Z	¼"	12"	12"	hardboard	1
AA	¾"	5"	7"	maple	1

*Some parts are cut larger initially then trimmed to finished size. Please read the instructions before cutting.

Supplies: ¾" walnut dowel; ¼" birch dowel; ¾" threaded rod 12" long w/3—¾" nuts; 4—¼×1¼" F.H. mach. screws and 4—¼" threaded inserts; ¼×3½" carr. bolts w/¼" washers and nuts; ⅜×2" carr. bolt w/wing nut and washer; #8×1¼" F.H. wood screw; #10×1½" F.H. wood screws; 4—½×4¼" mach. bolts w/washers and nuts; #6×¾" R.H. wood screws; #6×1" R.H. wood screws; 10-24×1" F.H. machine screws w/self-locking nuts; 2—4" steel T-hinges w/mounting screws; ¾-hp. (1,725-rpm) motor; 2" pulley to fit motor shaft; 5" pulley w/⅝" bore; ½×33" V-belt, 2×8" continuous hinge w/mounting screws; ⅝" steel rod 18½" long; 6" diam. stovepipe 17¼" long; epoxy; woodworker's glue; contact cement; strapping tape. *See Buying Guide at end of article for additional supplies and information.*

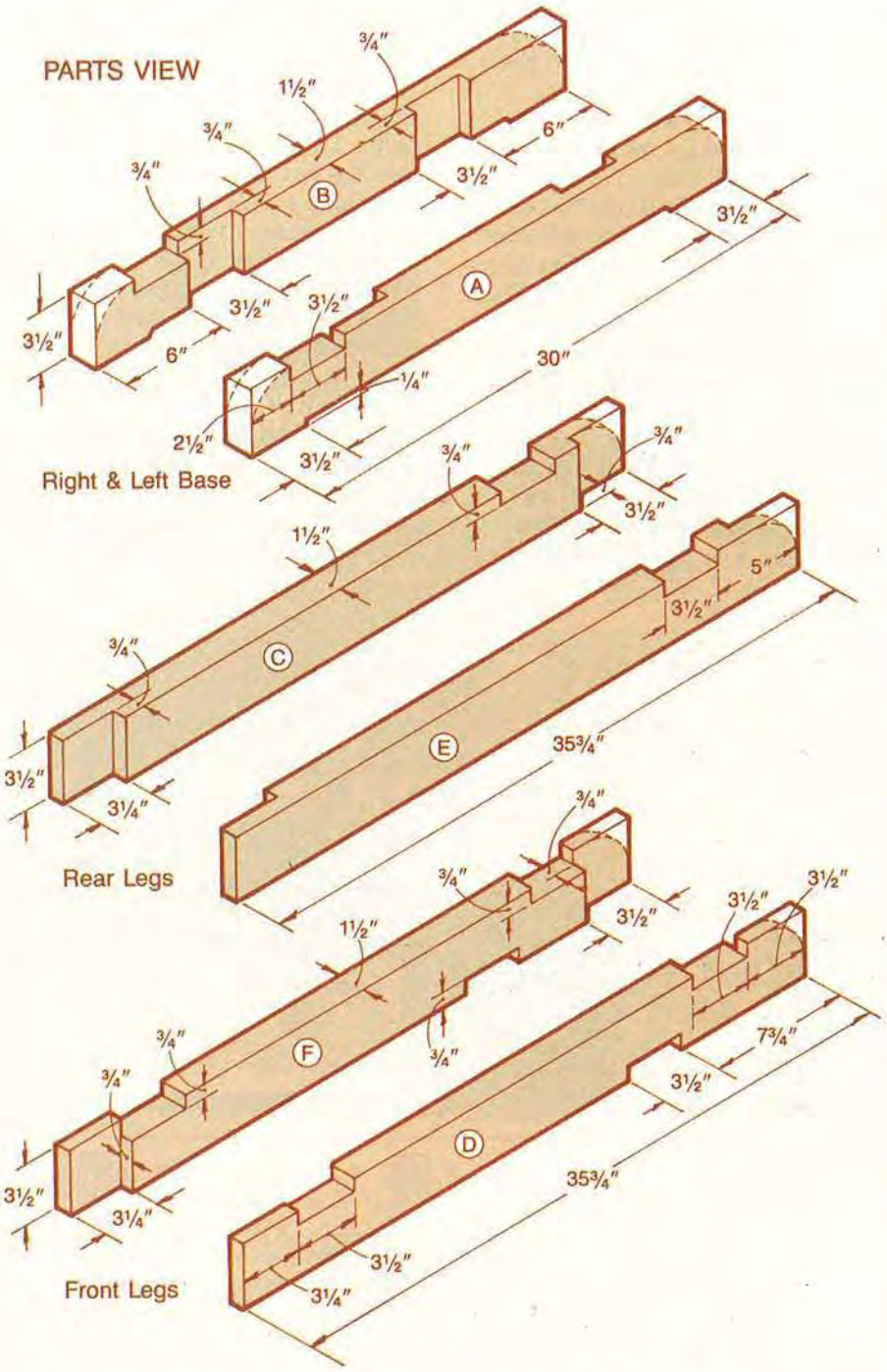

enclosed in the joints. Disassemble and use a router fitted with a ¼" round-over bit to round-over all edges of the leg assemblies *except* at the joint locations, and on the top and bottom of both G's where the pillow blocks will be mounted later.

7 Glue and clamp H and I to the leg assemblies. After the glue dries, remove the clamps and drill two ¼" holes in each joint. Then glue and insert the dowels, sanding flush after the glue dries.

8 Belt-sand an 8° bevel the length of the back rail (H) to provide clearance when adjusting the feed table.

9 Sand the rounded corners and all surfaces smooth and apply the finish.

BUILDING THE FEED TABLE

1 Cut two like-sized pieces of ¾" plywood (J) to size plus ½" in each direction. Laminate the two together, and after the glue dries trim the lamination to its finished size (12⅛×29").

2 Rip and crosscut the walnut trim strips (K, L). Cut a clearance recess for the drum sander in the top center of each L. Glue and clamp one K to each end of the plywood lamination, with the top and ends flush with the ends of the plywood.

3 Cut the plastic laminate (M) slightly oversized and apply the laminate with contact cement. Then, using a router with a flush trimmer, trim the laminate. Glue and clamp the side trim strips (L) to the feed table assembly.

4 Using a ¼" round-over bit, rout the outside edges of both L's.

5 Attach the T-hinges to the bottom of the feed table. Then fasten the feed table to the back rail (H) ⅝" from the right leg assembly as dimensioned in the Front-View Drawing.

CONSTRUCTING THE ELEVATION CONTROL

1 Cut the elevation control parts N, O, P and Q to size as dimensioned in the Bill of Materials. Clamp N and O together, then clamp P to the top of N-O.

2 Drill and countersink holes for the two #10×1¼" screws through the top of P and ½" into N and O as shown in the Elevation-Control Drawing. Screw P to N-O.

3 Clamp Q to the top of P, then drill and countersink holes for two #10×1¼" screws through the top of Q and ½" into P, and one through the side of N ½" into O. Install the screws. Mark the location and drill a ⅜" hole through N-O for the ⅜" carriage bolt.

4 Drill a ¾" hole vertically through the entire assembly (N-O-P-Q) where indicated in the drawing for the ¾" threaded rod. Remove all the screws and drill a 1⅛" hole 7/16" deep into the top of P and 3/16" deep into the bottom of Q.

5 Disassemble the pieces, then thread a ¾" nut on the ¾" rod and insert the rod through P. Trace the

Continued

outline of the nut and chisel out the excess. Repeat this with Q. The recesses house the nut snugly, stopping it from turning with the rod.

6 With a fine-toothed saw, cut the rabbet and slot in the top and back side of N as shown in the Front and Side Views of the Elevation-Control Drawing. The gaps will allow you to lock the threaded rod in position, preventing changes in the height of the feed table caused by sanding vibrations. Apply glue to the mating surfaces of N and O and screw the pieces together.

7 Apply glue to the mating surface of N-O and P, install the screws through P and into N-O, and allow the glue to dry. Install the carriage bolt and attach the washer and wing nut.

8 Insert the 12″ threaded rod through N-O and thread it through the nut in place in P. With the nut in place, glue and fasten Q to the N-O-P assembly.

9 Drill two ¼″ holes through Q where indicated for later mounting to the front rail (H).

10 Cut the handle (R) to size and shape. Round-over the outside corners with a ¼″ bit, then drill a ¾″ hole through its center. Secure the handle on the threaded rod with a ¾″ nut above and below the handle. Tighten the nuts to hold the handle firmly in position at the bottom of the threaded rod.

11 Position the elevation-control assembly as shown in the Front-View and Side-Section Drawings and clamp it in place. Using the two previously drilled ¼″ holes in Q as guides, drill like-sized holes through the front rail. Bolt the elevation control to the rail.

12 Cut the rod-tip holder (S) to size. Locate the center of S and drill a 1″ hole through it. Slip S over the rod and crank up the rod into contact with the feed table. Align S squarely with the bottom of the table, clamp it in place, drill pilot holes and install two #10×1½″ screws as shown in the Exploded-View Drawing.

CONSTRUCTING AND MOUNTING THE DRUM

1 Rip and crosscut eighteen 3¾″ squares from ¾″ plywood, mark diagonals to find the center, and drill a ⅝″ hole in the center of each.

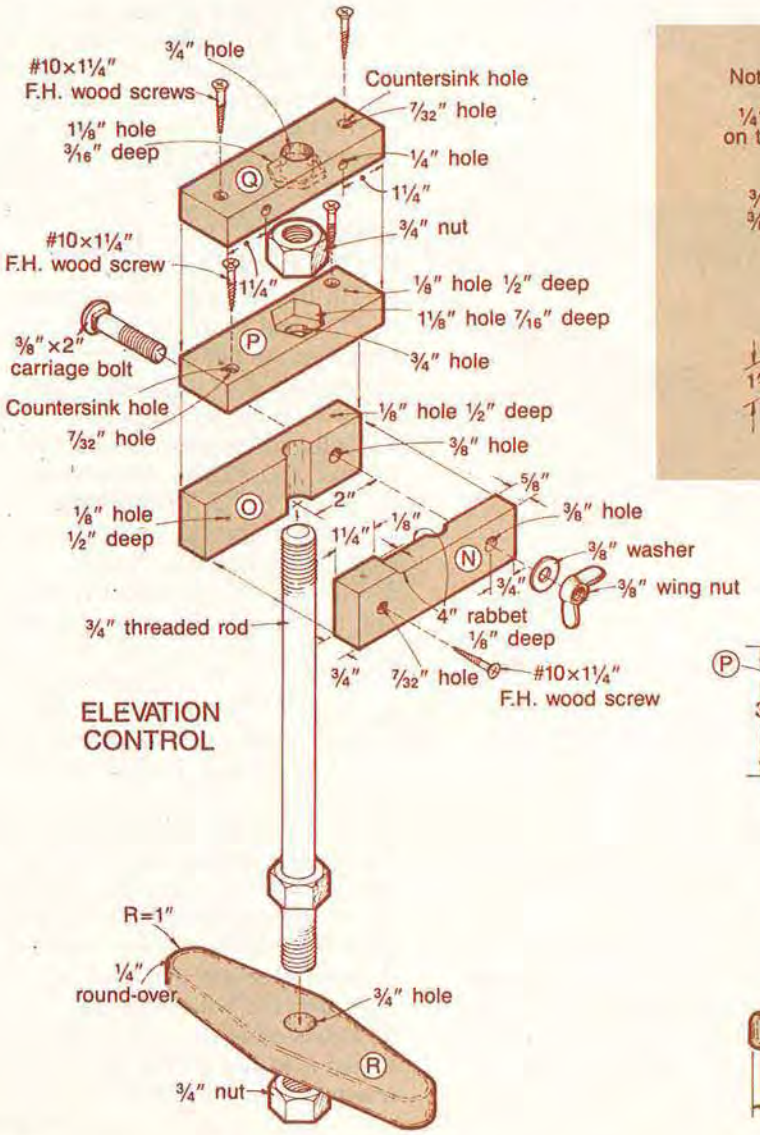

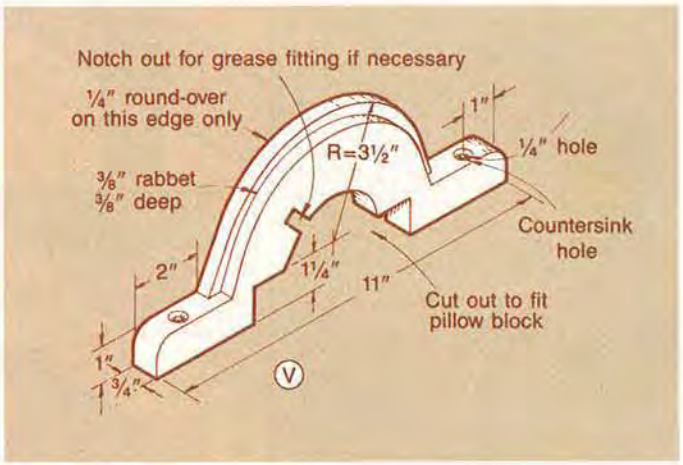

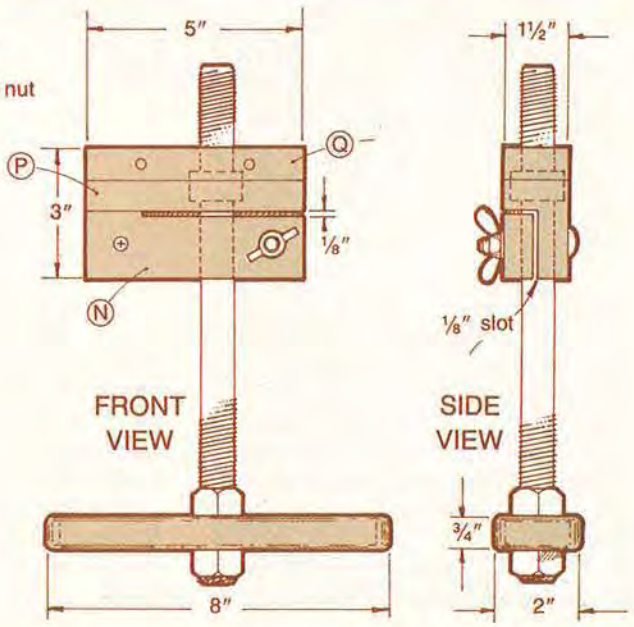

Using a piece of scrap plywood, drill a ⅝" hole in it 1½" from one edge and place a ⅝" dowel 2" long in the hole. Clamp the jig to the bed of your band saw with the center of the dowel 1⅞" from the blade. Fit the squares one at a time onto the jig and cut the 18 discs (T) to 3¾" diameter as shown below.

2 Rough up the ⅝" steel shaft with a file, then starting 1¾" from the right-hand end, epoxy the discs to each other and to the shaft. Once all the disks are on the rod, clamp them together with three bar clamps.
3 Slip the 5" pulley onto the left end of the drum shaft and insert the ends of the shaft into the pillow blocks. Set the shaft assembly in place on the stand.
4 Center the pillow blocks on G, clamp them in position, and mark the mounting hole locations. Remove the clamps and the pillow block/drum assembly. Drill ½" holes completely through both G's, and drill a 1¼" hole ½" deep on the bottom of the ½" hole to house the ¾" nut. Bolt the pillow blocks to the stand. Center the sanding drum over the feed table. Tighten the pulley setscrew, stop-collar setscrews, and the nuts on the bottom of the machine bolts.
5 Cut the motor mount block (U) to size and attach the hinge to it.
6 Attach the 2" pulley to the motor shaft. Clamp the motor to the mounting block, and position the drive belt to align the pulleys. Drill the ⅜" motor mounting holes, secure the motor mount to part I, and bolt the motor to U.

MAKING THE DUST HOOD

1 Cut the dust hood ends (V) to shape as dimensioned in the Parts-View Drawing (the shape of the pillow block used will determine the inside shape). With a rabbeting bit, rout a ⅜" rabbet ⅜" deep around the semi-circular inside top edges of V. Drill and countersink ¼" holes where indicated for later mounting of V to the stand.
2 Cut a 17¼" length of 6"-diameter stovepipe in half lengthwise. Drill pilot holes through the pipe and into each V where shown in the Exploded-View Drawing. Attach the stovepipe to V with #6×¾" screws.
3 Cut the maple strip (W) and acrylic strip (X) to size. Attach them to the hood assembly with machine screws. The acrylic provides a clear view of the sanding yet it prevents getting fingers too close to the abrasive action.
4 Cut part Y to size, then cut a hole through it and the stovepipe hood to match the diameter of the vacuum hose adapter. Using a band saw, cut Y to fit the shape of the hood. Screw the adapter to Y and screw Y to the hood from the inside of the hood with #6×1" roundhead wood screws.
5 Position the hood over the pillow blocks and mark the mounting holes for the threaded inserts on both G's. Drill the holes on the marks and install the four threaded inserts.
6 Sand all remaining wood surfaces and apply the finish of your choice. Connect the power supply switch to the front of the stand assembly.

SANDING THE DRUM TO SIZE

1 Run a hose from your vacuum to the vacuum hose adapter on the dust hood. Using contact cement or spray-on adhesive, attach two sheets of 60-grit sandpaper to a piece of ¾" plywood 13¾" wide by 12" long. Now, attach this to another piece of plywood or particleboard the same width as the feed table (12"). Raise the feed table until the sanding board just makes contact with the laminated drum. Plug the motor into the power supply switch, then plug the cord running from the switch to an outlet. Turn on the sander and vacuum and slowly feed the sanding board under the drum as shown in photo B. ***CAUTION:*** *Feed the sanding board through from the front side only. Continue to sand and raise the feed table with the elevation control until the sanding drum is uniformly round over its entire length. (This sanding ensures that the sanding drum is parallel with the feed table.)*

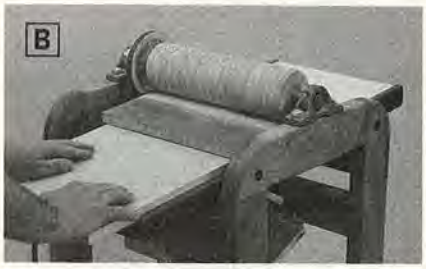

2 When the drum is true and smooth, measure its circumference and diagonally mark this length across the sanding strip as shown below, then cut along the line. Rotate the drum and wrap the sanding strip around it. Trim the other end flush with the end of the drum. (We secured the ends of the strip to the drum with strapping tape.)

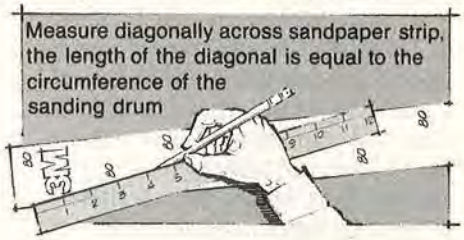
Measure diagonally across sandpaper strip, the length of the diagonal is equal to the circumference of the sanding drum

Note: Use 60- and 80-grit paper on the drum to remove unevenness remaining after resawing or for thickness sanding. Use 100-, 120-, and 150-grit for progressively smoother finishes.

HOW TO USE THE THICKNESS SANDER

1 Raise the table so that the bottom of the drum just touches the top of the material to be sanded, then lock the elevation control.
2 Slowly and steadily feed the material from the front side only, pushing the material on through the sander using the push block shown on page 87.
3 Unlock the elevation control and raise the table by turning the handle *no more* than an eighth of a turn at a time. Relock the elevation control. Repeat step 2 and again raise

Continued on page 87

Print this article

A CUT ABOVE THE REST!

PLACE MAT/NAPKIN RING SET

You won't find these distinctive accessories on anyone else's table—unless you happen to know another *WOOD* project builder.

In our excitement over having found a good easy way to resaw lumber into thin stock (we show you how in the article on page 44), we resawed all of the strips for the place mat shown here. But if we were going to build another set of them, we'd resaw the maple and walnut strips and simply rip the cherry and padauk as described in the instructions below. It's less work that way.

MAKING THE PLACE MATS

1 Rip and crosscut the walnut (A), maple (B), cherry (C), and padauk (D) to the sizes listed in the Bill of Materials.

2 Using the resawing techniques in the preceding article, resaw the walnut to ½" and the maple to ¼". Glue and clamp the walnut and maple to form a ¾" thick, 3" wide, and 14" long lamination, as shown in the Maple-Walnut Lamination Drawing. After the glue dries,

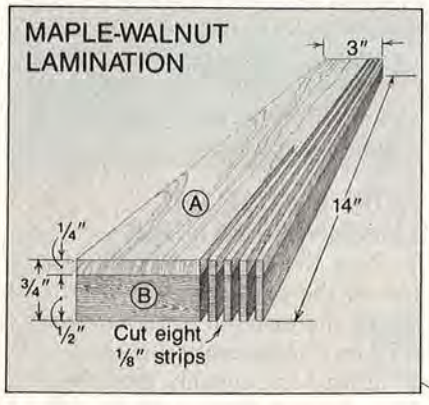

scrape off the excess and plane or joint one edge of the lamination. (**Note:** This lamination is wider than necessary to ensure safety when ripping the strips later.)

3 Set your table saw fence ⅛" from the blade. Use a push stick on the opposite side of the blade to rip all the stock into ⅛" strips. If the cut becomes uneven, stop and joint the edge of the stock and begin ripping again. For each place mat, you'll need two of the laminated walnut and maple strips, 18 cherry strips, and four padauk strips.

4 Roll out the vinyl (face side down) and use a framing square to mark out four rectangles measuring 14×19". (The pieces are cut slightly oversized—they're trimmed to size after the strips are glued on.) Cut the vinyl.

5 Position the wood strips face side down in the order in which they will be arranged. Then apply two coats of contact cement to the back side of the vinyl and to the back side of each strip, following the label directions. Carefully position each strip into place (face side up) on the vinyl. Use a veneer roller or a mallet and a block to ensure good contact between the strips and the vinyl.

6 With a framing square, mark the finished size (13×18") on each place mat and cut each to size. (We cut the mats with a band saw and trimmed the resulting "fuzz" from the vinyl backing with an X-acto knife). Mark a ¾" radius on each corner and cut the mats to shape.

7 Secure the mats to your workbench with double-faced tape and sand the surfaces smooth. (We sanded with a belt sander followed by a palm-grip sander with progressively finer grits.) Fold the strips and break the sharp edges of each with sandpaper.

8 Apply several coats of tung oil.

MAKING THE NAPKIN RINGS

1 Starting with ¾" stock, rip and crosscut the padauk (A), maple (B), walnut (C), cherry (D) and pine (E) to the sizes listed in the Bill of Materials.

2 Laminate the pieces as shown in the Napkin Ring Lamination Draw-

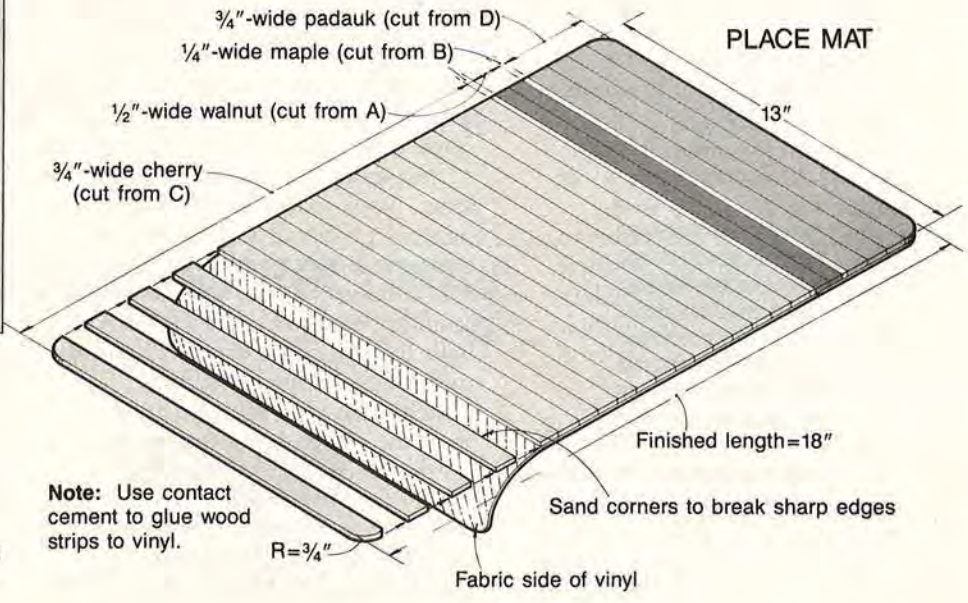
¾"-wide padauk (cut from D)
¼"-wide maple (cut from B)
½"-wide walnut (cut from A)
¾"-wide cherry (cut from C)
PLACE MAT
13"
Finished length=18"
Sand corners to break sharp edges
Note: Use contact cement to glue wood strips to vinyl.
R=¾"
Fabric side of vinyl

ing. (The scrap wood base, which you cut away later, allows you to make the needed cuts without the stock shifting.)

3 Clamp the lamination to your drill press table, then use a circle cutter to cut the outside diameter of the napkin ring to 2". Reset the circle cutter and cut the inside diameter to 1½", leaving a ¼" wall thickness as shown in the photo above. (There are several circle cutters on the market. We chose a General #5B—see the Buying Guide for details.)

4 Rip the scrap base (E) from the lamination, causing the rings to fall free. (We did this on the band saw, but you could use a table saw.)

5 Hand-sand to round-over the inside and outside edges of the rings and to smooth all surfaces. Apply tung oil. Wipe away any excess oil before inserting the napkins.

Note: To maintain the luster of the hardwoods in these projects, we periodically apply a coat of tung oil.

Cutting Diagram
Place Mats (4)

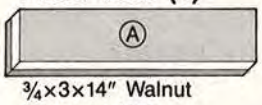

¾×3×14" Walnut
(resaw to ½")

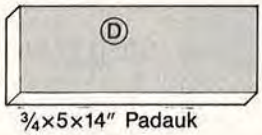

¾×5×14" Padauk

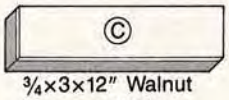

¾×3×12" Walnut
(resaw to ⅛")

Napkin Rings (4)

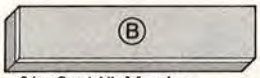

¾×3×14" Maple
(resaw to ¼")

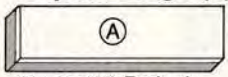

¾×3×12" Padauk
(resaw to ¼")

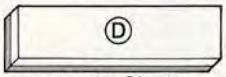

¾×3×12" Cherry
(resaw to ½")

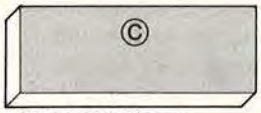

¾×5×14" Cherry
(4 pieces)

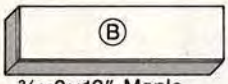

¾×3×12" Maple
(resaw two 1/16" pieces)

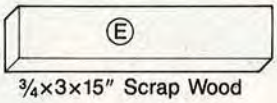

¾×3×15" Scrap Wood

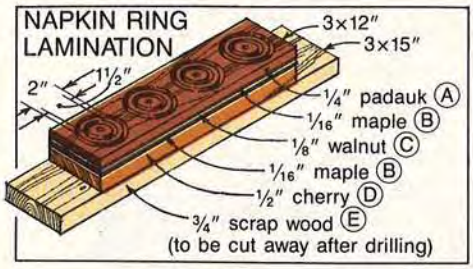

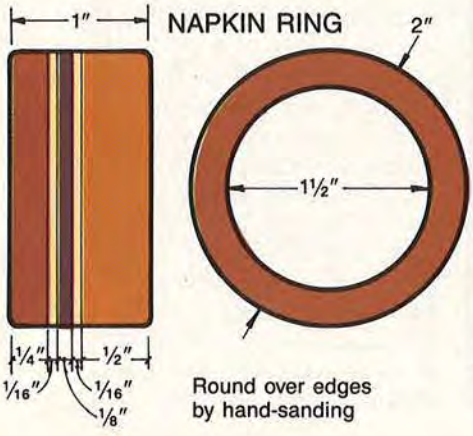

Bill of Materials

Part	Finished Size* T	W	L	Material	Qty.
PLACE MATS (4)					
A*	¾"	3"	14"	walnut	1
B*	¾"	3"	14"	maple	1
C*	¾"	5"	14"	cherry	4
D*	¾"	5"	14"	padauk	1
NAPKIN RINGS (4)					
A*	¾"	3"	12"	padauk	1
B*	¾"	3"	12"	maple	2
C*	¾"	3"	12"	walnut	1
D*	¾"	3"	12"	cherry	1
E	¾"	3"	15"	scrap wood	1

*These parts are cut larger initially, then trimmed to finished size. Please read the instructions before cutting.

Supplies: Contact cement, vinyl

BUYING GUIDE

● ***Adjustable Circle Cutter.*** #5B Manufactured by General Manufacturing Co. Inc. Cuts from 1" to 5½" diameter holes. KLOCKIT stock #55031. $9.95 plus shipping from KLOCKIT, P.O. Box 629, Lake Geneva, WI 53147 (or call 1-800-556-2548). ■

Project design: Jim Downing, Marlen Kemmet
Photographs: William Hopkins
Illustrations: Bill Zaun, Randall Foshee

Print this article

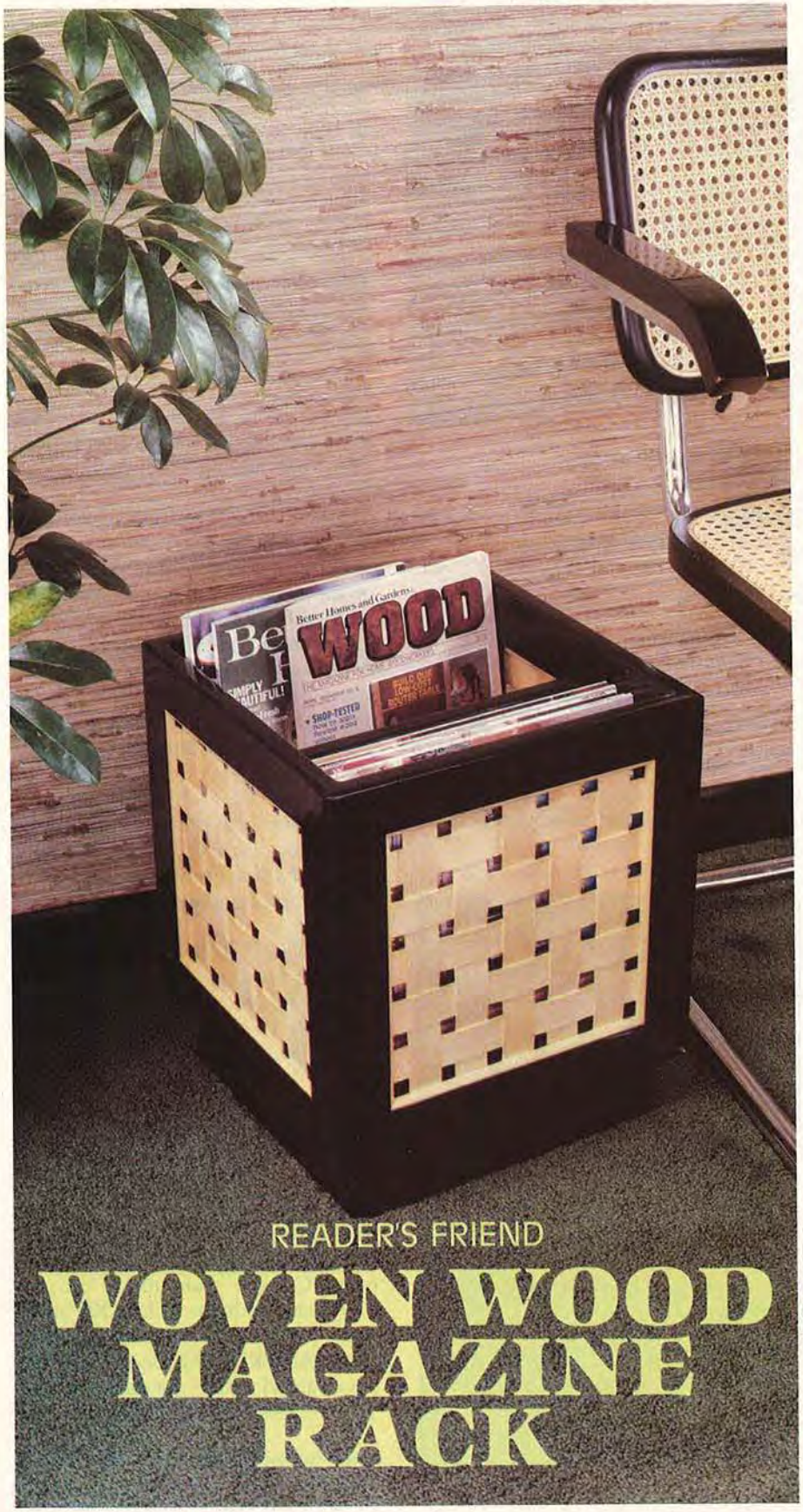

READER'S FRIEND

WOVEN WOOD MAGAZINE RACK

Resaw your own thin stock for the inserts that distinguish this handy home accessory.

If you're like us, your magazines wind up all over the place, making it darn near impossible to lay your hands on a specific issue quickly. We found the solution waiting in our workshop. This magazine rack is not only an eye-catcher—it also keeps several dozen issues neatly organized, binder side up. Stopped-spline joinery and resawn woven inserts make this project challenging yet definitely do-able.

BUILDING THE FRAME

1 Rip four 2" wide × 60" pieces from a birch board for the frame parts (A). Next, cut a ¼" rabbet ⅜" deep along one edge of each piece. (We cut the rabbets with a dado blade on the table saw. A router and a rabbeting bit would work equally well, though.)

2 Cut the frame parts to 12⅝", mitering both ends of each piece. As always, cut scrap stock first to check for the correct miter angle.

3 Using either a table saw or a router fitted with a slotting cutter, cut ⅛" stopped grooves ⅜" deep along both mitered ends of each frame member as shown in the Cutting the Stopped-Spline Drawing. (Be sure to center the blade on the material so that when you flip each A over to groove the other end, the cuts will align. We used a Sears Universal Jig; you may want to rig up your own jig for cutting these grooves.) Then, using ⅛" hardboard, cut a 11/16" wide × 2½" long spline for each joint. Shape one end of each to conform to the shape of the groove as shown in the Spline-Detail Drawing. (Whenever we use splines, we dry-fit the joints first to make sure the spline isn't too wide; if it is, the joints won't come together properly.)

4 Glue and clamp the four individual frames together. After the

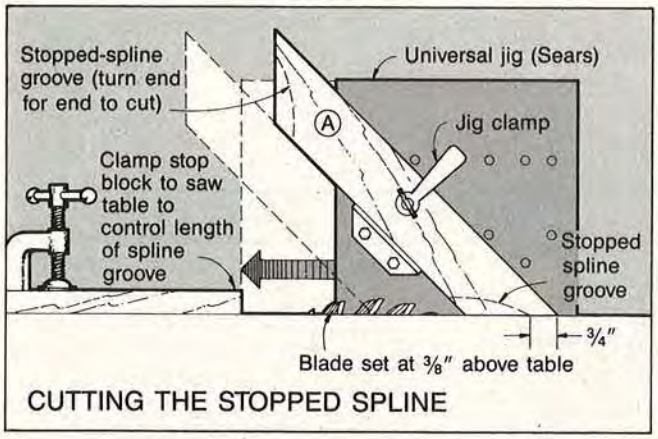
Stopped-spline groove (turn end for end to cut)
Universal jig (Sears)
Jig clamp
Clamp stop block to saw table to control length of spline groove
Stopped spline groove
3/4"
Blade set at 3/8" above table
CUTTING THE STOPPED SPLINE

Cutting Diagram

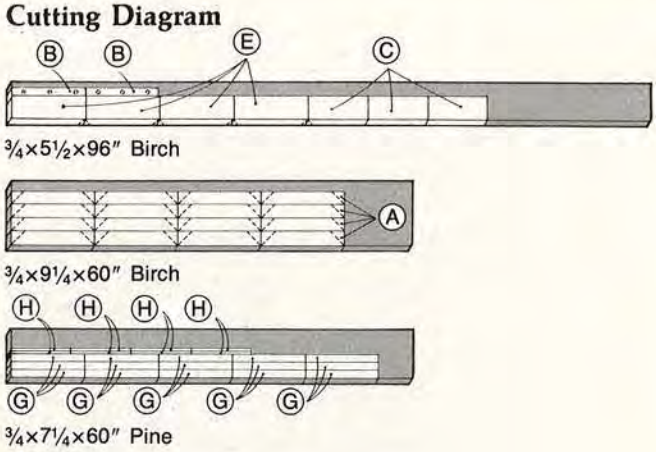

3/4×5½×96" Birch

3/4×9¼×60" Birch

3/4×7¼×60" Pine

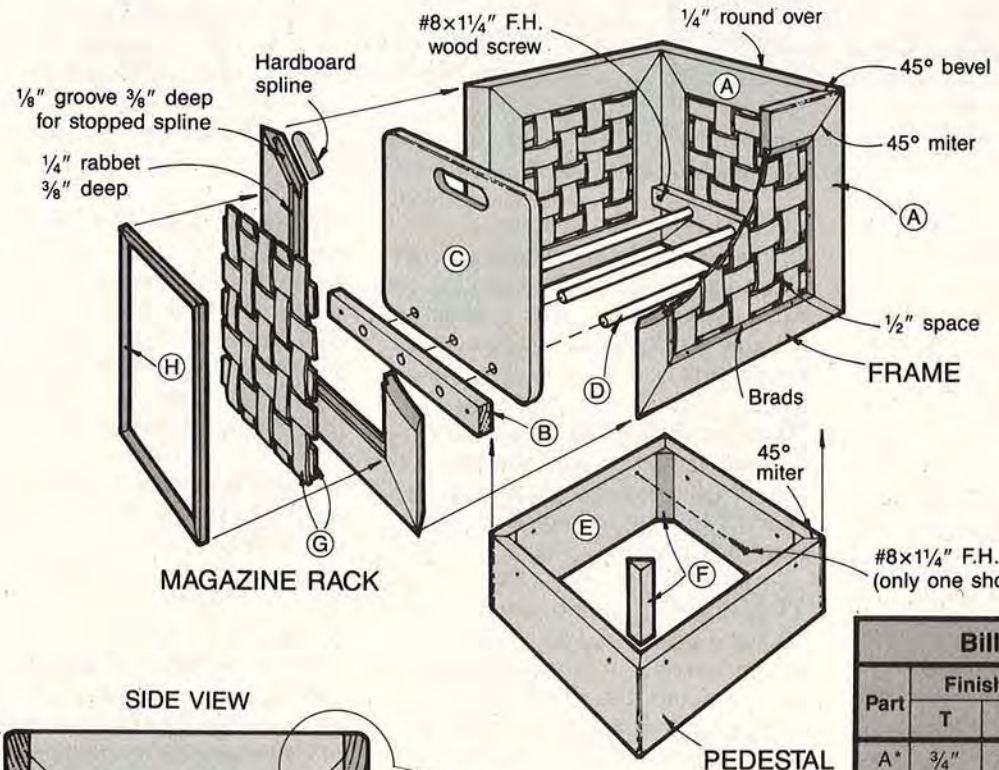

MAGAZINE RACK

PEDESTAL

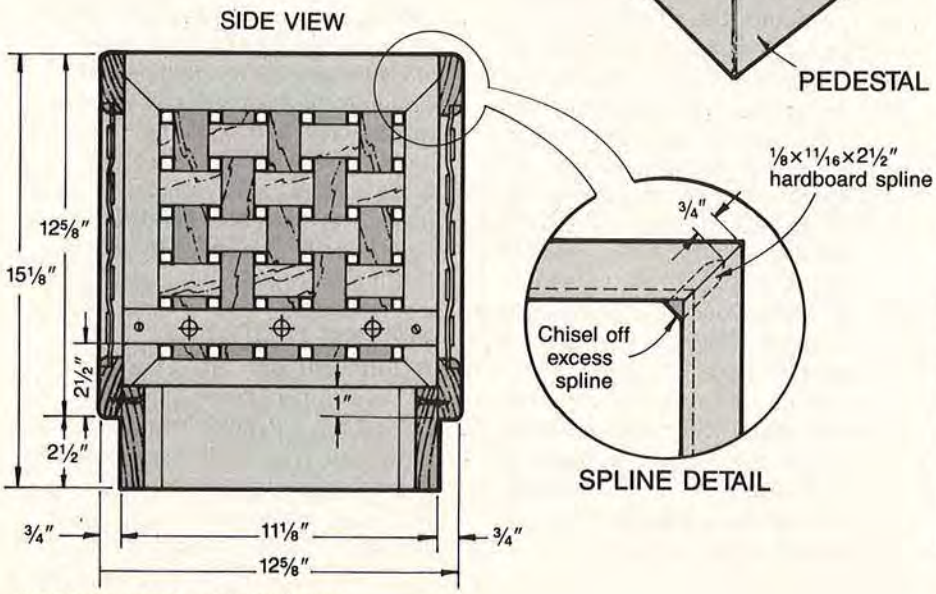

SPLINE DETAIL

Bill of Materials					
Part	Finished Size*			Material	Qty.
	T	W	L		
A*	¾"	2"	12⅝"	birch	16
B	¾"	1⅛"	11"	birch	2
C	¾"	10½"	9½"	birch	1
D	½" diam.		11"	dowel	3
E	¾"	3½"	11⅛"	birch	4
F	⅝"	⅝"	3½"	birch	4
G	1/16"	1⅛"	9⅛"	pine	40
H*	¼"	¼"	9⅛"	pine	16

*Some parts are cut larger initially, then trimmed to finished size. Please read the instructions before cutting.

Supplies: #8×1¼" flathead wood screws, ⅛" hardboard for splines, high-gloss black spray enamel, ½" brads, wood putty, spray-on clear finish gloss

Continued

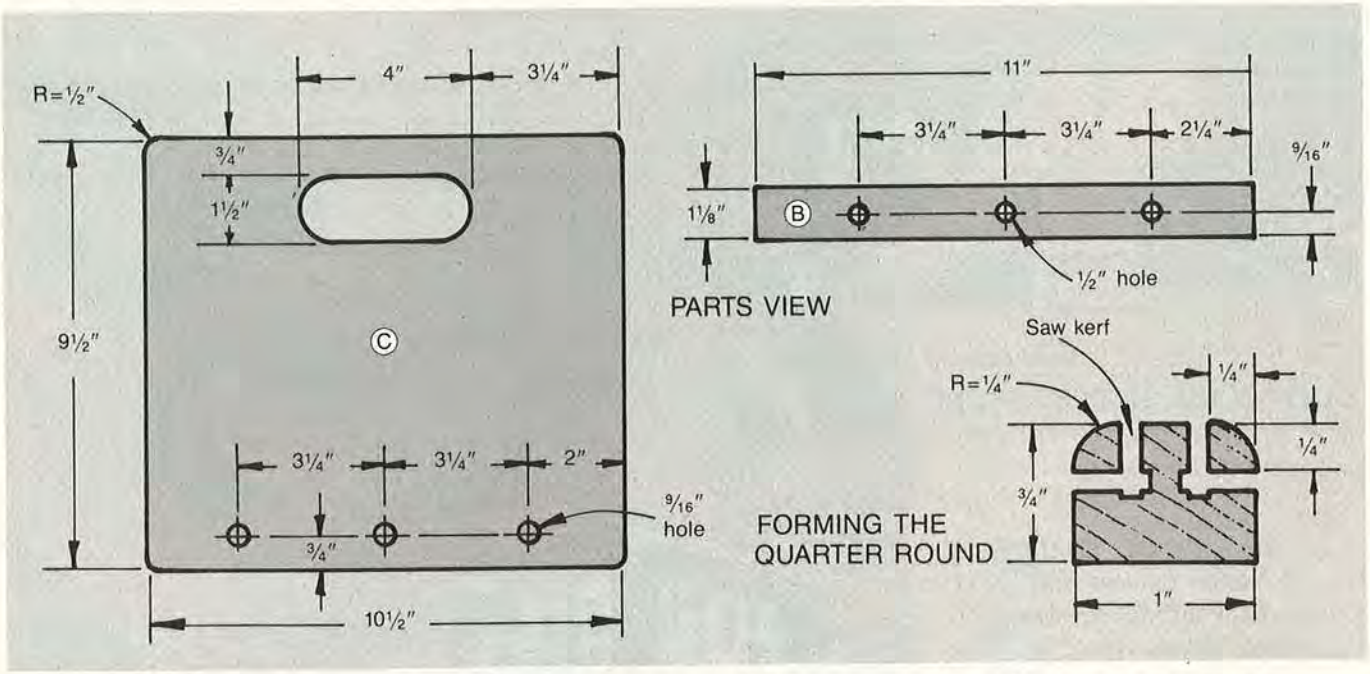

glue dries, chisel off the excess spline and sand the frames smooth.

5 Bevel-rip both edges of each panel at 45°. Save the beveled scraps; later you'll use them as glue blocks when assembling the pedestal.

6 Glue and clamp the four frames together to form the enclosure. (Web clamps work well for this type of clamping.) Use a square to ensure 90° corners.

7 Cut the parts for the sliding divider assembly (B-C-D) to size. (You may need to edge-join several pieces to make C to width.) Using the Parts-View Drawing as a guide, lay out, mark, and cut the holes in B and C and the handhold in C. (Cut the holes in both of the B parts at the same time to ensure accurate placement.) Radius the corners of C.

8 Using a ¼" round-over bit, round-over all edges of the divider (C), including the handhold, and the edges of the frame panels.

9 Cut the pedestal parts (E) to size, mitering both ends of each. Then, glue and clamp the pedestal together. Cut the previously mitered glue blocks (F) to length. After the glue dries, glue and nail the glue blocks in the inside corners for strength.

10 After the glue dries, sand the pedestal and screw it to the enclosure, allowing 2½" of the pedestal to show as indicated in the Side-View Drawing.

11 Using ¾" pine, rip three 60"-long pieces to 1⅛" for the woven inserts (G). Then, following the procedures described in our "Resawing Techniques" article on page 44, resaw the 1⅛"-wide boards into 1/16" strips. (We cut several extra strips—defects that aren't visible on the surface sometimes show up when resawing. We also damaged a few while weaving the wood.) Cut the strips to length (9⅛").

12 To make your own pine quarter round for the molding (H), cut two pieces of ¾" pine 1" wide and 4' long. Rout a ¼" round-over on two edges of each. Rip these pieces to ¼×¼" to form the quarter round as shown in the Forming the Quarter Round Drawing. Miter-cut the molding pieces to length.

FINISHING AND FINAL ASSEMBLY

1 Finish-sand the magazine rack and wood strips (G). Paint all the parts *except* sliding divider parts B and D, wood strips (G), and molding (H). (We sprayed on three coats of high-gloss black spray enamel.)

2 After the paint has thoroughly dried, put together the sliding divider assembly, lower it into the enclosure, and screw it to the frame.

3 Weave the thin strips and position the insert in the rabbet. (We used a ½" diameter dowel to space and position the strips.) Use ½" brads to attach the molding (H). Countersink the brads, fill with wood putty, and sand smooth.

4 Spray two or three coats of clear finish over the entire project. (We used Pratt & Lambert Varmor Clear Finish Gloss.)

BUYING GUIDE

● ***Universal jig.*** Fits ¾" wide, ⅜"-deep miter groove. Stock #9GT3236. $32.99 from Sears. To order, call your local Sears store. ■

Project design: Jim Downing
Photograph: Bob Calmer
Illustrations: Bill Zaun, Randall Foshee

Print this article

HEARING PROTECTION

YOUR DEFENSE AGAINST SHOP NOISE

On top of everything else you hear each day, shop noise can put you over the threshold that leads to hearing loss.

Do your ears ring after you operate a whining router? That's one sign of noise-induced hearing damage. If you expose your ears too long or too frequently to sounds above their safe tolerance, you'll suffer permanent hearing loss.

In a survey of high school industrial arts teachers, the state of Iowa discovered that 54 percent had a job-related loss. Yet, only about 3 percent of the teachers surveyed said they always wore hearing protection devices in the shop. Now Iowa and other states enforce state laws requiring hearing protection for teachers *and* students.

Of course, you probably don't spend as much time in a noisy shop as an industrial arts teacher, but consider all the other loud noises you hear daily: blaring music, loud mufflers, and construction noise, for instance. They all add up. The federal Occupational Safety and Health Administration (OSHA) reports that if you exceed a level of 90 dBA (a special decibel scale for measuring noise damaging to hearing) for eight hours a day, you'll have some permanent hearing loss. Maximum safe exposure times for other levels are shown in the table below.

Now consider the racket some of your woodworking equipment makes. From the list on this page, you'll see that a planer generates 108-118 dBA. According to OSHA, the longest your ears could take this punishment without some degree of hearing loss is about 15 minutes.

OSHA NOISE LEVEL EXPOSURE LIMITS

At this noise level	Hearing loss can occur after
85 dBA	16 hours
90 dBA	8 hours
95 dBA	4 hours
100 dBA	2 hours
105 dBA	1 hour
110 dBA	½ hour
115 dBA	15 minutes

How much protection?

To safeguard your hearing you must use devices with a high enough noise reduction rating (NRR) to bring the loudest dBA level of your working equipment down to a safe plateau. Let's say, for instance, that the working planer, at an average 115 dBA, is the highest noise level you'll encounter in your shop. Reducing what you hear to a safe 90 dBA level requires ear protection devices with a minimum NRR of 25 (quality devices state their noise reduction capability on the packaging).

However, if you don't own or run a planer, or anything else approaching that noise level, ear protection devices with a lower NRR will be sufficient.

SHOP NOISE LEVELS*

Machine	Noise generated
Planer	108–118 dBA
Joiner	103–104 dBA
Belt sander	98–99 dBA
Router	105–110 dBA
Table saw	96–99 dBA
Disc sander	92–93 dBA
Circular saw	103 dBA
Saber saw	98 dBA
Hammering	94 dBA

*Tools generating over 90 dBA.

Hearing protection options

Cotton balls, an old standby, are inadequate because they cannot block dangerous intensity or frequency levels. Reliable hearing protection devices muffle and filter noise that can damage your ears, but they don't shut out all sound. Unless you've already lost hearing, you can discern a machine in operation and pick up conversation.

The chart on page 88 includes a sampling from the two categories of hearing protection devices—muffs and ear plugs. These and similar products are available from safety supply houses, large tool and hardware retailers, and mail-order woodworking suppliers. Which device you choose should depend on its NRR, its wearing comfort, and how easy it is to clean.

Inexpensive foam-type ear plugs, the choice of many home woodworkers, provide protection, ease of cleaning, and more comfort than preshaped plugs. Their life span is limited to a few washings and wearings, however, and they give you a "stopped-up" feeling. You'll also have to insert, remove, and reinsert them if you can't stand to wear them all the time.

Muffs, the other popular (but comparatively expensive) alternative, are comfortable, easy to put on and take off, and have replaceable parts. They don't give you the stopped-up sensation, but their bulk can be bothersome.

In its state recommendation to high school industrial arts teachers, Iowa suggests either of the above for shop use. We suggest you try both at a dealer's before you decide, even if you have to spend 15 cents to test the disposable plugs.

Continued on page 88

Print this article

READERS, IT'S YOUR TURN! PROJECT

A. Turning out the staves

It's said that gluing up end grain, and having it hold, is nearly impossible. Yet Andrew Goldman, of Placentia, California has been joining his built-like-a-barrel bowls that way for years without failure.

Working with 12-sided vessels isn't a simple trick. It helps to know some geometry when figuring out the cutting angles for the joints. First, though, Andy rips his exotic wood (goncalo alves, mesau, pau ferro, and other dense species) to width, which will be the height of the bowl. He then crosscuts for the staves and band-saws the bases. The bowls measure 2½" to 6" in diameter and 6½" to 8" high.

For quick, clampless assembly, Andy has found that Franklin Hi-Tack (a five-minute-drying commercial yellow glue) works best. Once they are glued up, he mounts them on a plywood base and rough-turns the bowls on a lathe, adding a recess on the bottom side for a base. After turning the bottom piece, he glues it into the recess and the bowl is ready for finish turning. Andy prefers Deft Danish Oil, followed by paste wax, for a sheen.

B. Down-home dulcimer

A few years back a great storm tumbled a large walnut tree to the ground on Sue Farthing's property in New Concord, Kentucky. Recognizing an opportunity, Sue had it sawed into 1" stock, which she then stickered (i.e., spaced with equal-sized sticks for air circulation) and dried for two years in a shed. The walnut had to be resawn and planed to ⅛" before being fashioned into the back, sides, and fretboard of her six-string dulcimer.

To bend the sides to shape, Sue improvised a heating form of 2" pipe with a soldering iron inside. She packed the pipe with copper scouring pads for heat transfer. Heated and bent around the pipe by hand, the wood stays in shape when cooled. Sue completed the project by adding a white pine top and a peg head (where the strings are attached) of laminated walnut and pine. Sue finished with seven coats of tung oil varnish, sanding with #0000 steel wool between, and topped it off with paste wax.

C. Skeedaddling skateboards

Hot-dogging on concrete with skateboards like Bruno Lenzini's, right, may become the rage in Bruno's hometown of Ankeny, Iowa.

He used cordia, bird's-eye maple, walnut, and padauk to construct the skateboards, laminating ⅛"-thick slices together to get the ½" bases. The complicated part was forming the kick tail, Bruno says. To bend the wood, he had to build a two-part form of 2" stock the width of the boards (8" or 10"), cutting away a wedge from the inside end of the top piece and *adding* a wedge to lift the laminates on the bottom piece.

Bruno traces the 30" long skateboard outline from a cardboard pattern onto the wood and saws it out with a jigsaw. After finishing with several coats of polyurethane, he bolts on the trucks (wheels), which you can buy at sporting goods stores.

SHOWCASE

D. Woodlot rolltop

Winters can be harsh and dreary in Hamburg, Wisconsin, but Jim Cappel weathers them in his workshop, where he built the walnut-stained ash rolltop desk at left. The desk, his first major woodworking project, was made from plans—"without a hitch," Jim proudly notes.

The ash came from his woodlot, but required three years to air-dry before it became usable stock. Jim says he imitated kiln drying by placing the ash in front of his woodstove to get it to 9 percent moisture content. He checked it all the way with his moisture meter.

The 29½×51×30" desk is solid 4/4 stock with ¾" edge-joined sides and back. Jim used polyurethane, buffed down with auto rubbing compound, for the finish.

E. Lovely laminations

A master carpenter started James Bennett in woodworking in 1969. That was while Jim was in the Navy. Now, he's retired and makes laminated boxes in his Pensacola, Florida workshop.

Jim designs his attractive, diversified, and challenging creations in purpleheart, cocobolo, and other bright woods. He first glues up several contrasting woods in planks 1½"×3½"×4', then crosscuts them to box length and stacks them up. On a band saw, Jim cuts through the stack following different designs. Next, he interchanges the resulting pieces for a pleasing effect and glues them up again before running them back through the band saw on edge to create the drawers.

Jim passes the assembled boxes on to his wife, Patricia, for finishing. She uses sanding sealer for the glasslike surface which gets a final coat of Velvit Poly-Gel. A rubdown with extra fine steel wool completes each box. ■

To submit your projects:
Send a 35mm color slide, with the project as the focal point in a simple background. No people, please. Include a capsule description—materials used, special joinery techniques, finish, and dimensions, for example. *WOOD* will pay $25 for published projects. Unless you enclose a self-addressed envelope with sufficient postage, your slides will not be returned.

Send to:
Project Showcase
Better Homes and Gardens®
***WOOD* Magazine**
Locust at 17th
Des Moines, IA 50336

Burled Top HALLWAY SHELF

Rich-looking walnut, a burled veneer top, and raised-panel craftsmanship make this project a real standout.

Want to make an elegant first impression on visitors when they enter your home? Then give this classic hallway shelf a try. It's smaller than most projects that call for raised-panel construction—a safe way to develop your skill at this technique (see *WOOD*, June, 1985, page 43, for advice). You can order the beautiful walnut burl veneer for the top from several sources; we obtained ours from Artistry in Veneers, 450 Oak Tree Ave., South Plainfield, NJ 07080.

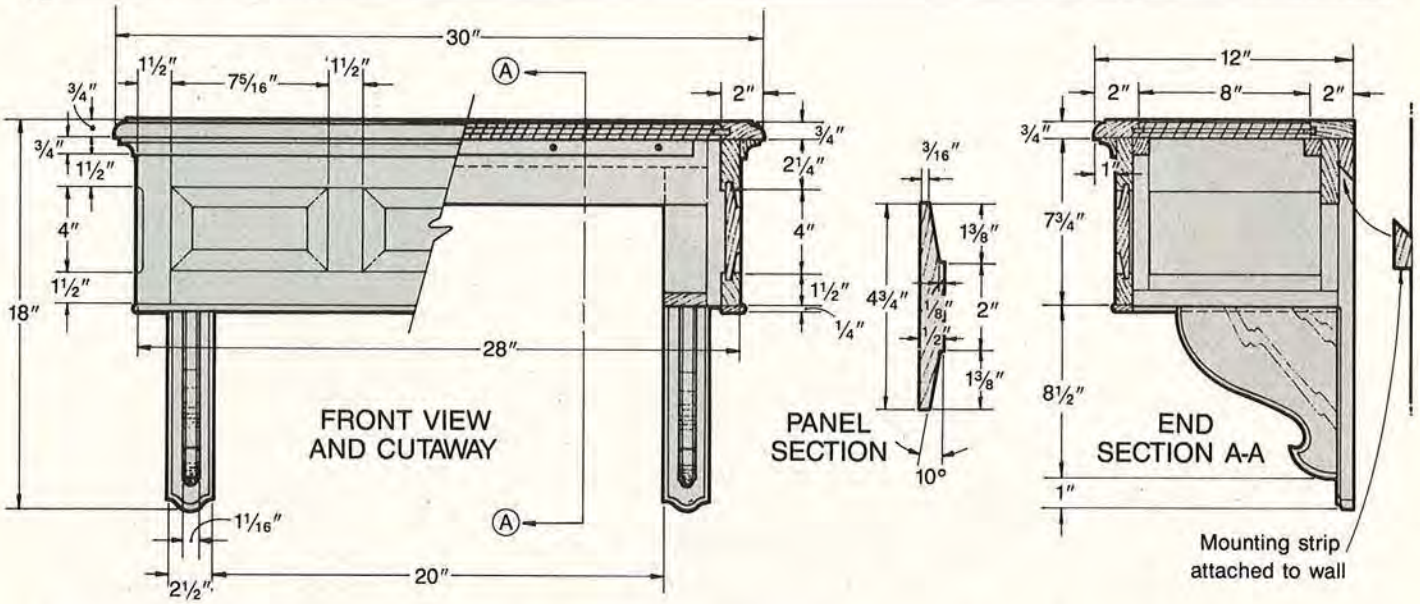

BUILDING THE CARCASS

1 Rip, then crosscut the carcass members (A, B, C, D, E, and F) to the finished sizes indicated in the Bill of Materials.

2 Using a router and a straight bit, or a table saw, cut a ¼" groove ⅜" deep and ¼" from the front edge along the bottom edge of A and B, along the top edge of C and D, both edges of E, and along both ends of A, B, C, D, and E.

3 Cut the ¼" grooves ⅜" deep along the two adjoining sides of F as shown in the Exploded-View Drawing. Position the grooves ¼" from what will be the two outside faces of F. Using a ¼" cove bit, rout the 4"-long coves on the outside corners of F as dimensioned in the Front-View Drawing. (We clamped stops to our fence and routed the coves in F on the router table.)

4 Rip and crosscut the back carcass member (G) to size and cut a ⅜" rabbet ⅜" deep along each end.

5 Cut the front and side panels (H and I) to size. (You can buy ½" walnut or resaw ¾" stock to ½" for the panels as we did.) To make the chamfered cuts in H and I, tilt your table saw blade to 80° and raise it to cut a depth of 1⅜" where shown in the Panel-Section Drawing. Set the rip fence 3⁄16" from the blade at table level. Then make the cuts on each panel. (To avoid costly errors, we test-cut scrap wood first.)

6 Sand all of the cabinet's shell parts, particularly the chamfered borders of the raised panels. Cut the hardboard tenon splines to size as dimensioned in the Exploded-View Drawing. Dry-clamp the components together to ensure a precise fit. (To allow for expansion, we planed 1⁄16" off the top and cut 1⁄16" off one side edge of each raised panel.) Remove the clamps and make necessary adjustments.

7 Glue and clamp the cabinet front (A-C-E-F-H). To allow for expansion, H is not glued in the grooves; it "floats" freely. After drying, glue the end panels to the front assembly and part G between the ends. Clamp and check for square. Remove any excess glue after a tough skin forms.

8 Cut the trim pieces J and K to size plus 1" in length. Using the top ⅛" of a 3⁄16" round-over bit, rout the front top and bottom edges. Cut J and K to size, mitering both ends of J and the front ends of the Ks. Attach J and K to the bottom of the carcass with glue and brads.

FASHIONING THE SHELF TOP

1 Cut the plywood top (L) to size and attach the burl veneer (M) with contact cement. Apply contact cement to both the plywood and veneer, then use a veneer roller to flatten out the veneer. Trim flush with the edges of L.

2 Rip the top framing pieces (N, O, and P) and cut them to length, mitering the ends of N and O. Cut a ¼" groove ⅜" deep along the center of the inside edge of N, O, and P and the ends of P. To ensure a flat top, machine all pieces with the top side against the fence. Using the same setting cut the ¼" groove ⅜" in the L-M panel. Cut ¼" hardboard splines to size.

3 Glue and clamp the top assembly together. When dry, use a ½" round-over bit to rout a bead along the front and side edges of the top as indicated in the Exploded-View Drawing.

4 Rip, then crosscut the top cleats (Q) to size. Place the assembled top upside down on a work surface and position the carcass on the top as dimensioned. Hold the back cleat against G, then drill and countersink pilot holes where indicated and install the screws. Repeat this process to attach the front cleat to A.

Continued

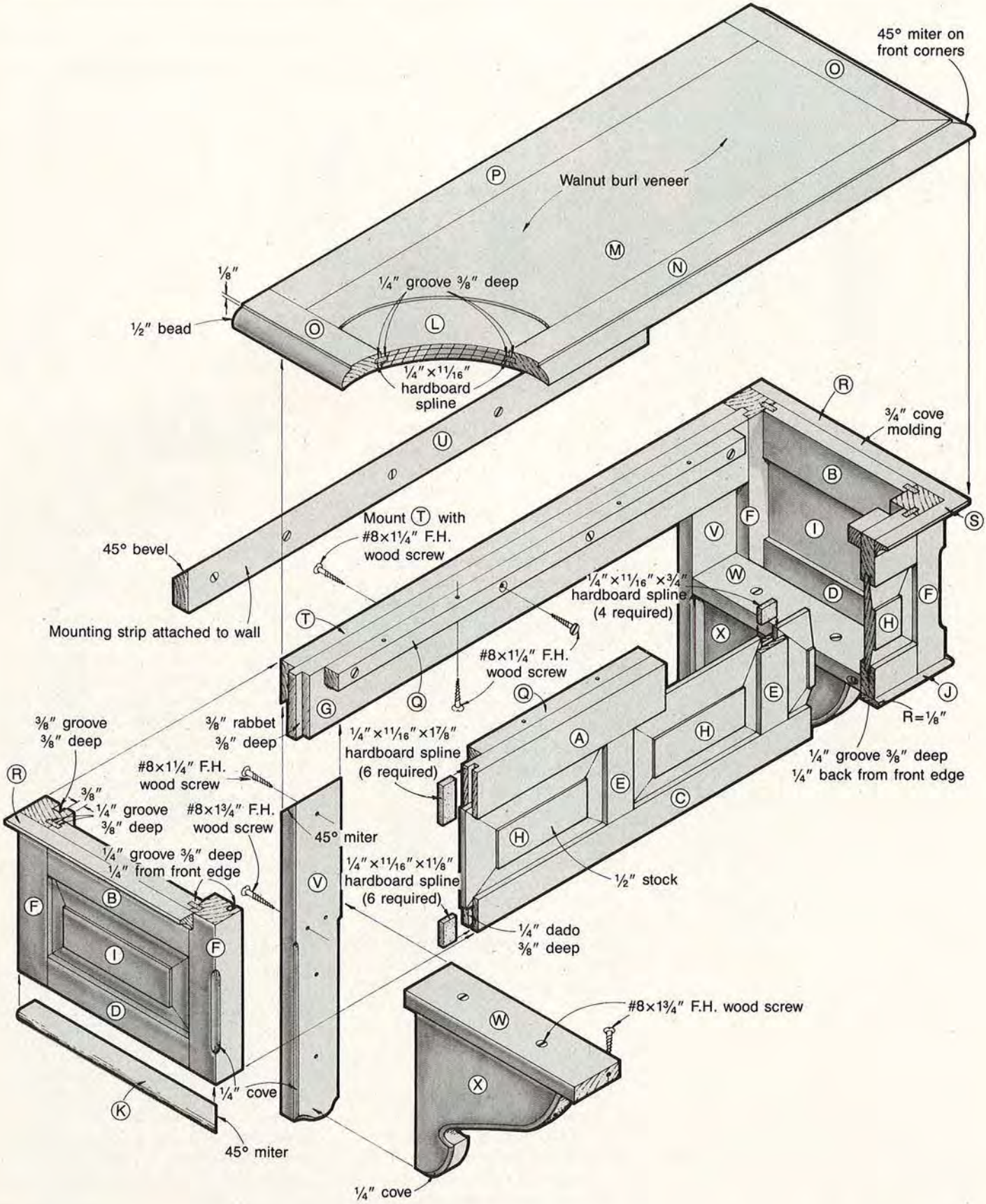
45° miter on front corners
Walnut burl veneer
1/8"
1/2" bead
1/4" groove 3/8" deep
1/4" × 11/16" hardboard spline
3/4" cove molding
45° bevel
Mount T with #8×1 1/4" F.H. wood screw
Mounting strip attached to wall
1/4" × 11/16" × 3/4" hardboard spline (4 required)
#8×1 1/4" F.H. wood screw
3/8" groove 3/8" deep
3/8" rabbet 3/8" deep
1/4" × 11/16" × 1 7/8" hardboard spline (6 required)
R=1/8"
1/4" groove 3/8" deep 1/4" back from front edge
#8×1 1/4" F.H. wood screw
3/8"
1/4" groove 3/8" deep
#8×1 3/4" F.H. wood screw
45° miter
1/4" groove 3/8" deep 1/4" from front edge
1/4" × 11/16" × 1 1/8" hardboard spline (6 required)
1/2" stock
1/4" dado 3/8" deep
#8×1 3/4" F.H. wood screw
1/4" cove
45° miter
1/4" cove

Bill of Materials

Part	Finished Size*			Material	Qty.
	T	W	L		
A	¾"	2¼"	25"	walnut	1
B	¾"	2¼"	8"	walnut	2
C	¾"	1½"	25"	walnut	1
D	¾"	1½"	8"	walnut	2
E	¾"	1½"	4"	walnut	2
F	1½"	1½"	7¾"	walnut	4
G	¾"	3"	25¾"	walnut	1
H	½"	4¾"	8 1/16"	walnut	3
I	½"	4¾"	8¾"	walnut	2
J*	¼"	1"	28½"	walnut	1
K*	¼"	1"	11¼"	walnut	2
L	¾"	8"	26"	plywood	1
M*	1/28"	8"	26"	walnut burl veneer	1
N	¾"	2"	30"	walnut	1
O	¾"	2"	12"	walnut	2
P	¾"	2"	26"	walnut	1
Q	¾"	¾"	23½"	pine	2
R	¾"	¾"	11¾"	walnut	2
S	¾"	¾"	29½"	walnut	1
T	¾"	2"	25"	walnut	1
U	¾"	2"	19½"	walnut	1
V	¾"	2½"	15⅝"	walnut	2
W	¾"	2½"	9½"	walnut	2
X	1 1/16"	8"	8½"	walnut	2

*Some parts are cut larger initially then trimmed to finished size. Please read the instructions before cutting.

Supplies: contact cement, #8×1¼" flathead wood screws, #8×1½" flathead wood screws, #8×1¾" flathead wood screws, ¼" hardboard for splines, ½" brads, finish

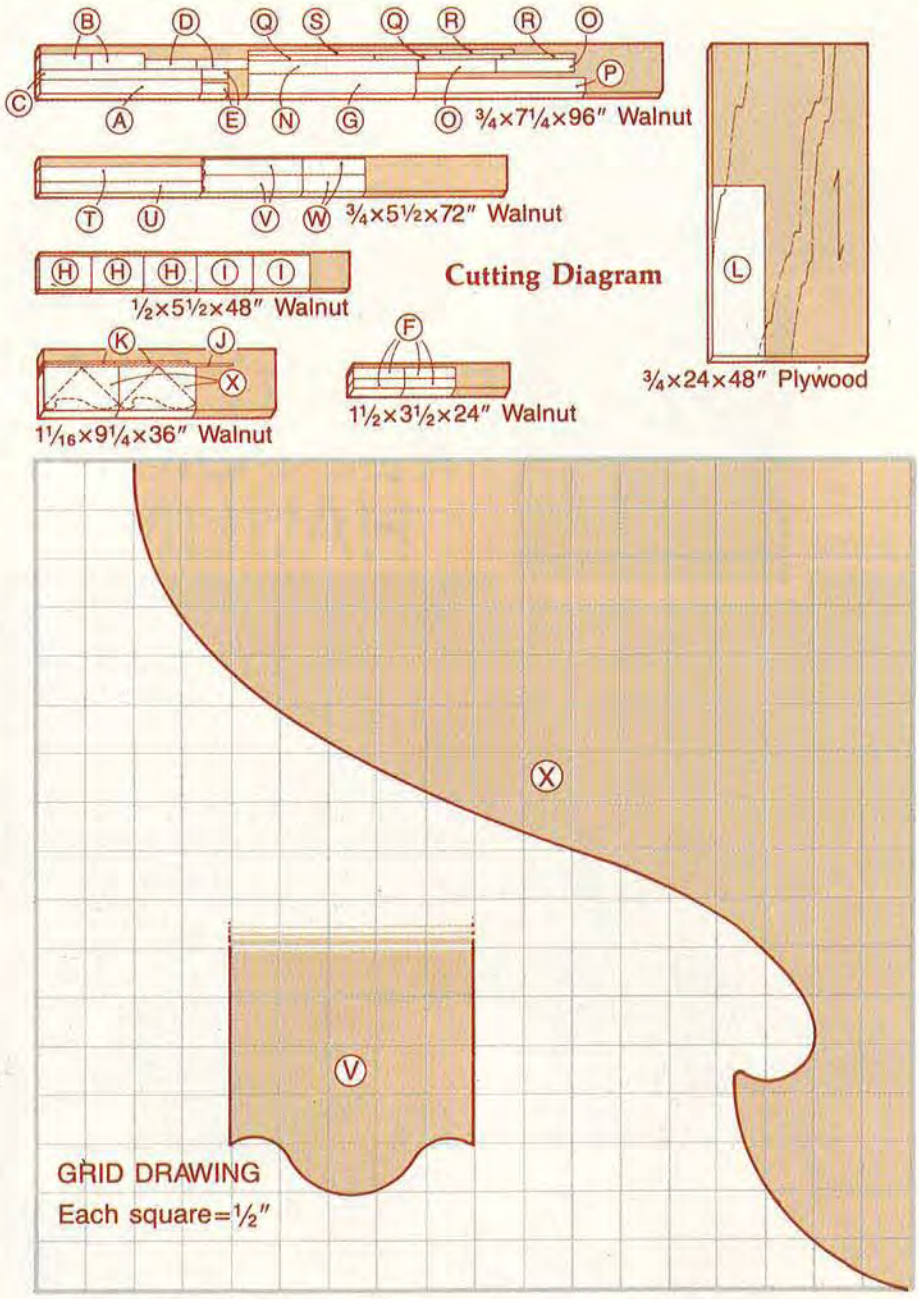

5 Drill pilot holes through Q into the top (L), and attach the top to the carcass with #8 × 1¼" screws. Cut the cove molding pieces (R and S) to size, mitering both ends of S and the front end of R, and attach them to the underside of the top lip with glue and brads.

6 Rip a piece of ¾" walnut to 4" and crosscut it to 25", then bevel-rip it in half at 45° to form parts T and U. Attach T to the back of the cabinet assembly as shown in the End-Section Drawing. Cut U to 19½". You will later screw part U to the wall to interlock with T, thus mounting the shelf to the wall.

MAKING AND ATTACHING THE SHELF BRACKETS

1 Cut the bracket members (V, W, X) to size and shape as indicated in the Grid and End-Section Drawings. Use a ¼" cove bit to rout the decorative edges on V and X. Assemble the brackets as shown in the Exploded-View Drawing.

2 Attach the bracket member assembly to the shelf, toe-screwing W to A and screwing V to the back of G. Finish-sand the shelf, being careful not to sand through the veneer, then apply the finish of your choice. (We applied several coats of polyurethane, using steel wool between coats.) Attach part U to the wall and mount the shelf, interlocking T and U as described in step 6. ■

Project design: David Ashe
Photograph: Hopkins Associates
Illustrations: Bill Zaun; Randall Foshee

Print this article

FOUND WOOD

FOREST GEMS FREE FOR THE HAULING

I CAME

I SAWED

I CONQUERED

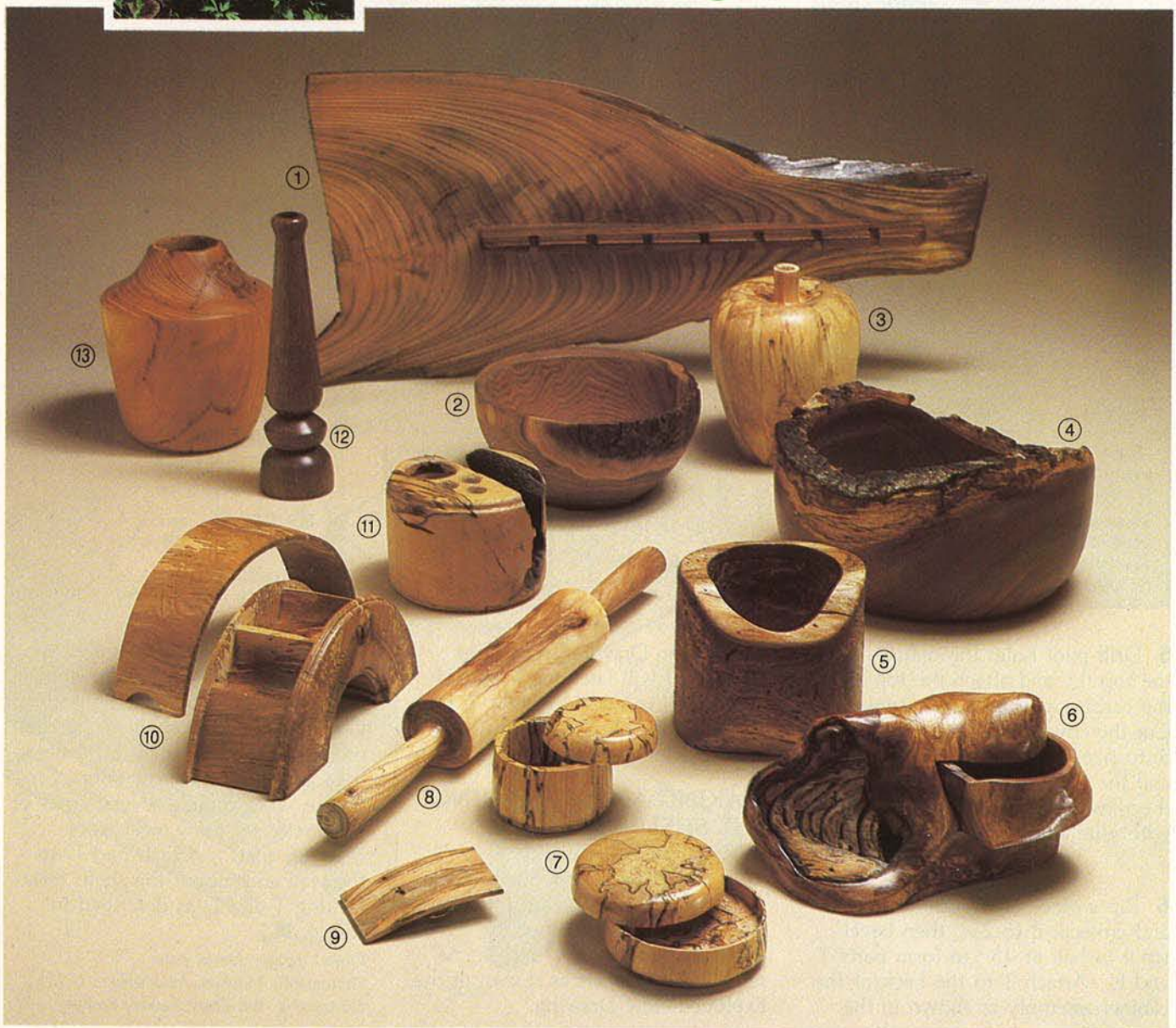

It's unique, unexpected, and—to top it all off—free (or nearly so). Found wood is everywhere, and as we discovered, you can work it into some dazzling projects. Here's a report by features editor Peter J. Stephano, the ham in the photos at left.

You'll never buy wood like it at the lumberyard or hardwood retailer because what we call "found wood" never leaves the forest, at least commercially. Loggers and lots of other folks consider burls, crotches, partially decayed or bug-riddled wood, and practically all downed trees, as waste wood, or, at best, firewood.

Don't let this wood's humble status deceive you, however. Beneath an often drab, dirt-covered exterior you may discover sound, attractively grained (sometimes even spectacular) wood that is dry and workable. Of course, there's always the possibility that much of what you come across will be too decayed, too smashed and broken, or too waterlogged to fool with.

What you'll find

Besides free specimens of all the commercially harvested hardwoods (walnut, maple, oak, etc.) that grow where you live, you'll happen upon wood not usually offered for sale. These real forest gems include:

- **Spalted wood.** Beginning wood decay in many species tints grain with the colorful swirls and patterns of marble (maple, beech, birch, and box elder spalt with phenomenal beauty).
- **Burls.** Sometimes called burrs, burls appear as rounded, woody outgrowths on tree trunks. Inside, these swirls from ill-fated buds provide an astounding grain figure.
- **Crotches.** The area just below the separation of the trunk into twins shows intriguing figure when sliced lengthwise.
- **Root stock.** The ball at the tree base that starts about 1' above the ground and extends 1' below ground level contains heartwood and sapwood intertwined for a special grain effect.
- **Bug wood.** Tunneled, bored-out, wooden residences of powder-post beetles and grubs, if structurally sound, can make eye-pleasing projects.

For decades, vacationers have collected driftwood, perhaps the classic found wood, in its sand-washed, sun-bleached variations of form and texture. West Coast wood seekers, particularly Californians, harvest the iron-hard, richly hued root burl of the manzanita shrub, then turn it for outstanding vases and bowls (see following page).

Photo at left

You may not always be able to make a silk purse from a sow's ear, but you certainly can turn waste wood into some super pieces.

All of these projects came from free, found wood: (1) fishing rod rack from a scrap of old rough-sawn elm board with crotch figure; (2) butternut bowl from firewood scrap; (3) spalted maple weed pot; (4) bowl of decayed walnut crotch; (5) buggy butternut pencil holder; (6) one-drawer jewelry box from walnut burl; (7) band-sawn and bored-out spalted maple change boxes; (8) rolling pin from maple firewood; (9) spalted maple belt buckle; (10) compartmented earring box of spalted beech; (11) fire-scorched and spalted hickory pencil/note holder; (12) walnut bud vase; (13) osage orange vase.

Note: We suggest you focus on found wood that is already dry. Dry wood requires less care and preparation before working than greenwood. Finding, cutting, seasoning (drying), and storing greenwood to make it stable requires special knowledge and techniques, which we plan to discuss in future issues of *WOOD*. For now, bring home wood that fits in one of the Three D's—down, dead, or dying. Also, unless you're equipped for logging, seek only short bolts (sections of a tree limb or trunk) and pieces you can cut free with a bow, pruning, or small chain saw and can carry yourself.

Scouting found wood

In urban areas, found and free wood may be as close as your doorstep or a neighbor's yard in the guise of a dead shade-tree limb. A call to your city forester's office also can turn up piles of downed, dry stock that once may have graced boulevards. Also try these sources: tree service companies, construction sites, power companies (they trim trees for line maintenance), and county landfills.

Rural areas provide a bountiful harvest in wooded public and private lands (get permission first). Slashings left from logging operations provide tree parts too disfigured, gnarled, or short to haul out (check with sawmills listed in the yellow pages to find loggers names or ask around at a chain saw dealer). Other sources include commercial fruit orchards, local sawmills for discards, highway maintenance departments, farm woodlots and hedgerows, river-fed lakes, wooded stream banks, and beaches.

Spotting the good stuff

You want dry wood, but how can you tell if it's dry enough? Clearly, a pocket moisture meter is your best bet. If you don't own one (they cost about $100), you'll have to make an educated guess based on weight. Dry wood will be a lot lighter than green. Even better, bring along a belt hatchet and rap the wood with the flat end (if a sawed end is exposed, hit it there). A resonant "knock" is a fairly good indicator of dryness—greenwood sounds rather dull.

Rapping with a hatchet can also tell you if a burl or a limb contains a worthless, decayed core. To be sure, cut into it with your saw for a peek into the wood that will confirm or deny its soundness. If the wood is spalted, you'll see the dark-lined pattern.

Often, good wood may be decomposing on the outside (in the sapwood), and yet have a solid, workable heartwood. In cases like this, inspect the cut ends of the piece to check for a solid core.

Continued

Then cut off the sapwood to salvage heartwood.

Sometimes downed wood, and especially driftwood, will be wet from ground moisture or even completely waterlogged. If it looks, feels, and sounds otherwise solid, bring it home despite the moisture; it will remain just as solid after proper drying.

Preserving your found wood

Follow these simple steps to preserve and finish seasoning your "finds":

1. Before you take wood home, remove the bark. This leaves pests where you found them and makes for cleaner, neater stacking later. Also chop away any decayed, soft (punky) wood and leave it behind.

2. Apply a sealer to any freshly sawn ends. End grain both absorbs moisture and frees it faster than wood around the bolt. This results in cracking and the tiny fissures called checks that develop during the stress of rapid drying. The U.S. Forest Products Laboratory recommends aluminum paint in a spar varnish base or asphalt roofing cement as an end coating.

Two woodworkers we know, Dale Nish of Provo, Utah, and Jim Woodruff of Denver, use a commercial wood sealer, Mobilicer-M, but advise that either paraffin or paste wax works, too. An Iowa wood collector, Allen Pratt, says shellac works for him.

Other sealers vary from thinned white glue to oil-base paint. Whatever you use, coating the ends (and about 1" up onto the sides) allows the wood to continue drying gradually.

Note: Split larger chunks, or rounds, of wood in half lengthwise to expose the pith (dark center core of immature wood). Then, chop out the pith to prevent decay and coat the end grain.

3. Treat riddled wood for insects. Buggy wood still may be actively infested, and the critters can spread to other wood. If you want to save your find, heat it in an oven or microwave (slowly) to 130 F. to kill the pests, or use a spray pesticide.

Storing your stash

For the first month or two (how long depends on whether or not your dry wood is damp), it's wise to stack your found wood outside, cordwood fashion, so the air can circulate through it. If you've ever stacked firewood, you know what we mean—off the ground, with enough space to let the wind blow through, and the top of the pile covered with a plastic tarp.

After this initial stacking, or seasoning, period, bring the wood indoors until you want to use it. But keep it off damp basement floors and out of places with high humidity. Ideally, to avoid checks, your storage spot should closely approximate the atmospheric conditions where the wood will be worked and finally displayed.

Many woodworkers have great results with air-dried wood. Others insist that wood must be kiln-dried to adequately reduce its moisture and make it stable. Without your own kiln, you'll have to store your wood where it will remain dry and where you can monitor it for good results.

Possibilities for found wood

What can you make with found wood? The items photographed for this article should give you some ideas, but your newly discovered stock really has few limitations—size may be one, the amount of degrade (checking and cracking during seasoning) the other.

Use your found wood as individual project pieces, or as stock to be resawn as parts of many projects (the latter especially if you initially split larger chunks into squares for drying). With a fence on a band saw or a special jig on a table saw (see article, page 44) you can reduce spalted wood, burls, and crotch wood into thinner stock ideal for exquisite jewelry box tops, belt buckles, or inlay work. Look to the wood, and let it suggest alternatives. ■

THE MAGNIFICENT MANZANITA

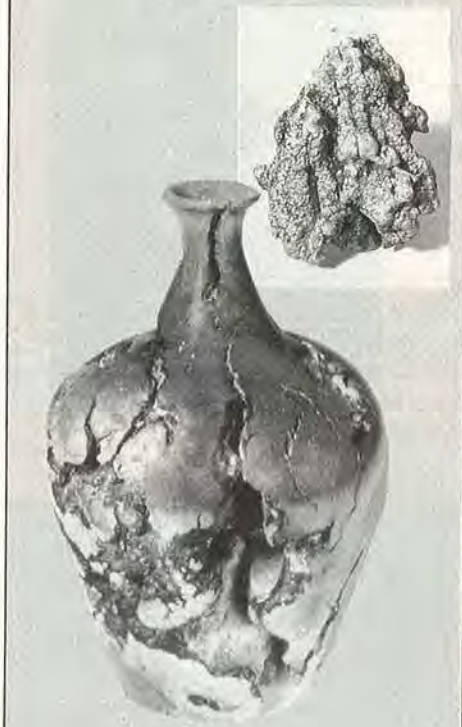

Sculptured marble? Ceramics? Neither—but this turned vase of manzanita root burl has characteristics of both. Found primarily in Mexico and California at elevations above 1,000 feet, manzanita is a hardwood shrub with a dense, gnarled root system. At the base of the root is the burl (shown in inset). With tendrils and thin roots trimmed off, the burl can be worked into fascinating and colorful turnings, bases, and even tabletops (some burls reach 3' in diameter).

However, working manzanita isn't easy. The roots often grow around rocks that remain undetected until hit by a woodworking tool.

In California, a Forest Service permit (free) allows you to dig a few pieces in designated areas. Manzanita also is available by mail order from Shir-Lee Manzanita Ranch, Inc., Dept. W, P.O. Box 6, Potrero, CA 92063.

Produced by Peter J. Stephano
Photographs: William Hopkins, Gary Zeff, Marlen Kemmet

Print this article

Dolls are a lot like young kids. They HATE to go to bed. But almost to the doll, they love to swing, eat, and play school. You can make things even more fun by building one or more of these pint-sized furniture pieces. We know someone else who'll think you're pretty great, too.

SMILE AWHILE

DOLL FURNITURE

Continued

SWEETHEART OF A SWING

1 Cut the frame uprights (A) and the cross members (B) to size plus 1″ in length. Mark and miter the angled ends of A to finished length (use the Angle Guide as a reference). Glue and clamp the two upright assemblies together. (We used temporary glue blocks tacked in position with hot-melt glue as shown in the Exploded-View Drawing to anchor the clamps.)

2 Bore four 1″-diameter holes ¼″ deep where indicated in the Exploded-View Drawing. Then, resaw some birch scrap stock to ¼″ and use a plug cutter to make two surface splines (C). (These add strength to the joint.) Glue the surface splines in the two outside holes, and sand smooth after the glue dries.

3 Lay the frames on a flat surface, then position the cross members (B) under them, 9″ up from the bottom of the frames. Trace the angle to be cut on both ends of each B, then miter their ends. Glue the B's between the uprights and, after the

Bill of Materials

Part	Finished Size*			Material	Qty.
	T	W	L		
A*	¾″	1¼″	24″	birch	4
B*	¾″	1″	9⅜″	birch	2
C	1″ diam.		¼″	dowel	2
D	1″ diam.		14½″	dowel	1
E	¾″	8⅛″	8¾″	birch	1
F*	¾″	¾″	8½″	birch	2
G	¾″	1⅜″	7⅜″	birch	1
H	¼″ diam.		¾″	dowel	2
I	⅜″ diam.		9⅜″	dowel	2
J	¾″	1¼″	9½″	birch	2
K	¾″ diam.		5½″	dowel	2

*Some parts are cut larger initially, then trimmed to finished size. Please read instructions before cutting.

Supplies: #8×1½″ flathead wood screws, #8×1¼″ flathead wood screws, chain, 48″ of #14 weldless jack and single coil chain, 8—medium screw eyes, 2—¼×2″ hanger bolts with wing nuts and washers, 2—¾″ key rings, clear finish

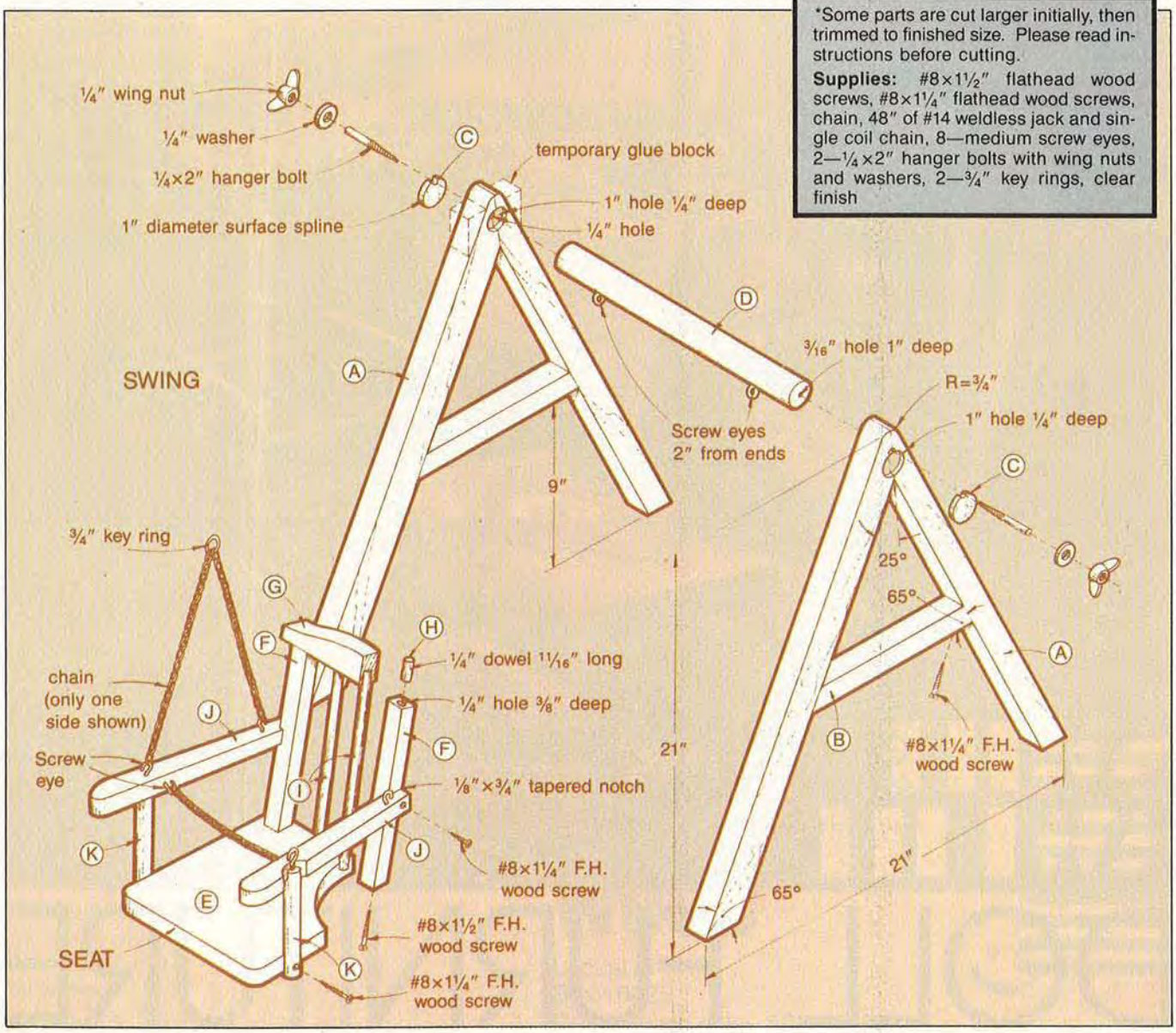

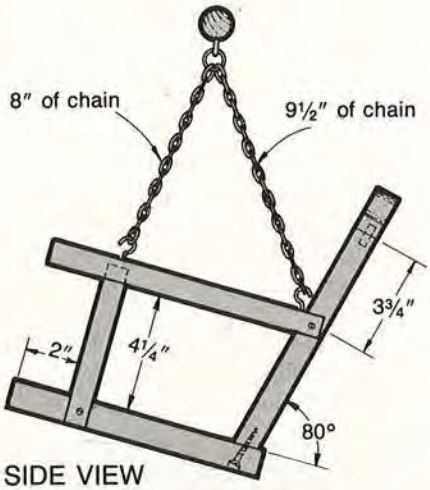

SIDE VIEW

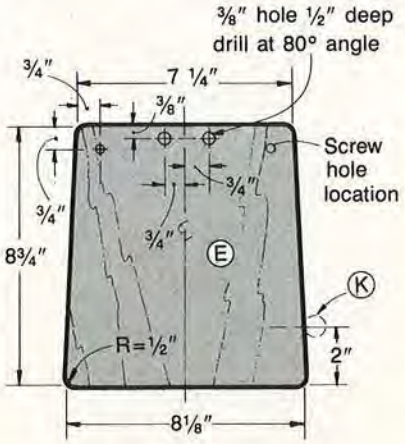

SEAT

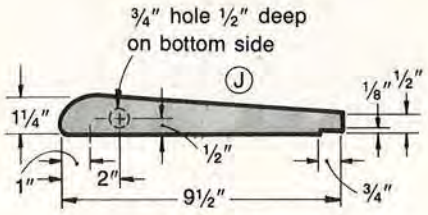

ARMREST

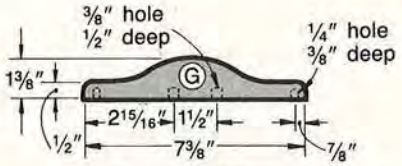

TOP RAIL

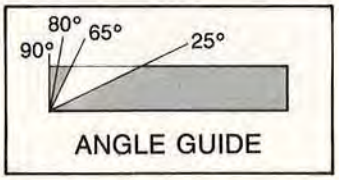

ANGLE GUIDE

glue dries, toe-screw a #8 × 1¼" screw at each joint. Round the top of the frames by cutting or sanding.

4 Cut the top rail (D) to length. Drill a ¼" hole through the center of the remaining two 1" holes to accommodate a ¼×2" hanger bolt. Using this hole as a drilling guide, insert D into the hole and drill a 3/16" pilot hole 1" deep into the ends of D to receive the wood-thread end of the hanger bolt. Attach D to the frames with the hanger bolts, washers, and wing nuts.

5 Cut the chair seat (E) and the chair back parts (F, G, H, I) to size. [Cut the seat (E) and the top rail (G) to the shape indicated in the Parts-View Drawing.]

6 Lay out, mark, and drill holes in the seat and the top rail (G) where indicated in the same drawing. Also bevel one end of each of the chair back supports (F) at 80°, and drill a ¼" hole ⅜" deep in the center of the squared-off end of each.

7 Glue and clamp the chair back assembly (F-G-H-I) to the seat (E). (We used two Jorgensen sliding head-type clamps.)

8 Cut the armrests (J) to the shape shown in the Parts-View Drawing. Lay out, mark, and drill a ¾" hole ½" deep in the bottom of each armrest (refer to the drawing for positioning). Then, cut the armrest supports (K) to length, and glue and clamp them into the holes in the armrests. After the glue dries, position the armrest assembly (J-K) against the seat and the chair back supports (F) where shown in the Seat-Side View. (You may need an extra pair of hands to help out here.) Drill the pilot holes where shown and screw the armrest assembly to the seat and chair back.

9 Install the screw eyes and attach the key rings and chain. Adjust the length of the chain so that the back of the seat rests slightly lower than the front. Sand all the parts smooth and apply a clear finish.

NOT-VERY HIGH CHAIR

Note: Building the high chair requires several angled holes. While you could measure and drill each hole as angled in the drawings, we simply "eyeballed" the angles when drilling.

1 Cut the legs (A) to length. Then, cut a tenon on one end of each leg. To do this, set the fence on the table saw ⅜" away from the side of the saw blade farthest from the fence. Then, raise the blade ¼" above the table surface. One at a time, place the legs against the miter gauge with the end to be cut against the rip fence; slide the dowel and miter gauge forward. Once the dowel is over the center of the moving blade, *slowly* roll the dowel to cut a ¼" tenon ⅜" long. Then sand a chamfer on the bottom of each leg.

2 Cut the stretchers (B, C) to length and the seat (D) to shape as dimensioned in the Seat Drawing. Drill four angled ¼" holes ⅜" deep in the seat bottom for legs, as shown in the drawings (the hole locations are dimensioned in the Seat Drawing while the angles are given on the Front- and Side-View Drawings). Then drill ⅜" holes ⅜" deep in the legs for B and C (see the Front- and Side-View Drawings for correct positioning).

3 Cut the chair back uprights (E), top rail (F), armrests (G), dowel pins (H), back supports (I), and armrest supports (J) to length. Drill a ⅜" hole ⅜" deep directly into the center of the bottom end of each upright, both ends of the top rail, and one end of each armrest. Taper the ends of E, F, and G as shown, then glue the dowel pins (H) into the ⅜" holes in E, F, and G.

4 For mounting the uprights (E) in the top of the seat, locate and drill ⅜" holes ⅜" deep at a compound angle, tilting 5° back and 10° out as shown in the Front- and Side-View Drawings.

Continued

5 Drill ⅜" holes ⅜" deep into the uprights for the top rail and armrests (the holes for the top rail are drilled at 10° from center while the holes for the armrests are drilled at 5° from center). Drill two holes in the top rail and the seat for the back supports (I). Drill a hole in each armrest and seat for the armrest supports (J).

6 Fit the chair together and redrill as necessary. Then glue and clamp the chair together. (We used band clamps on the legs and a variety of clamps on the chair back and armrest assemblies.)

7 Cut the tray arms (K), tray (L), spacers (M), and dowel pins (N) to size. Chamfer the inside end of each spacer (M). Cut a trough in the tray by fitting the router in your router table with a ⅜" diameter core-box bit. Make the outside cuts using the fence to keep the raised edges on each side, then use a straight bit to clean out the center.

8 Glue and clamp the tray (L) between the tray arms (K), drill holes as indicated in the drawing, and dowel the pieces together.

9 Glue one spacer (M) to each tray arm (K). After the glue dries, drill a 3/16" hole through the center of each M and on through the tray arm. Position the tray assembly against the uprights (E) and drill a pilot hole into each upright.

10 Finish-sand the chair and tray assembly, apply finish, and screw the tray to the chair.

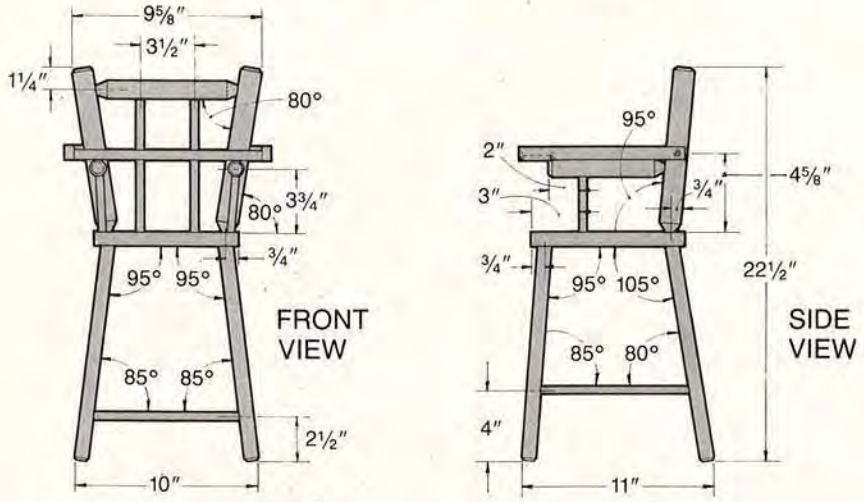

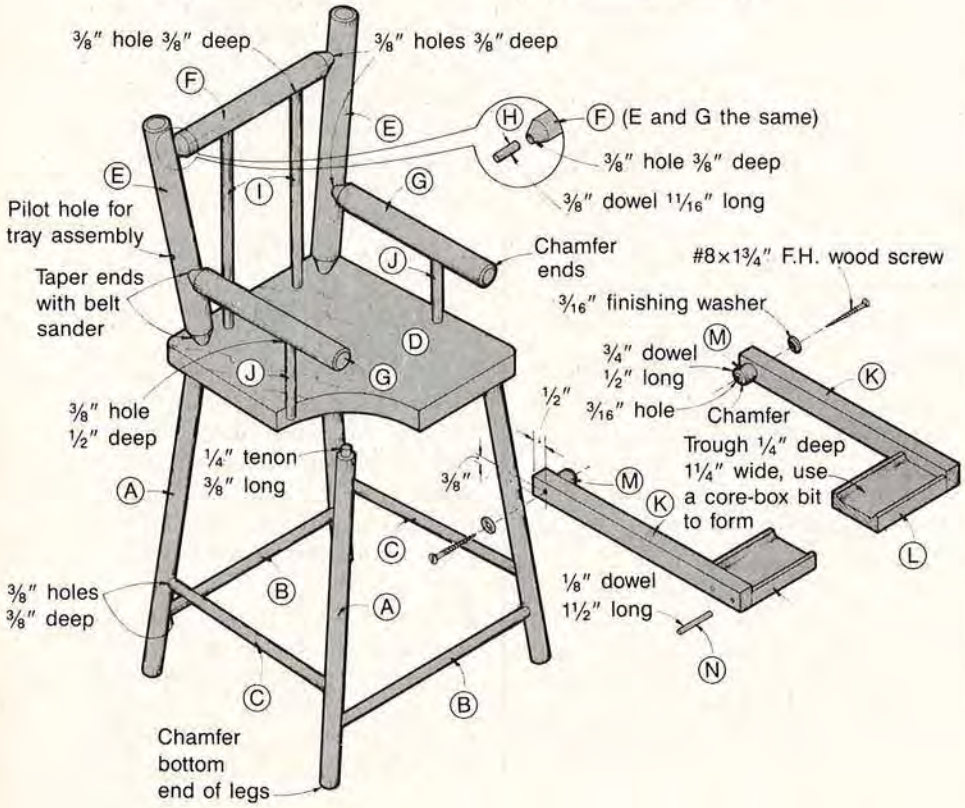

Bill of Materials

Part	Finished Size* T	W	L	Material	Qty.
A	¾" diam.		12½"	dowel	4
B	⅜" diam.		8¾"	dowel	2
C	⅜" diam.		9⅜"	dowel	2
D	¾"	8⅛"	8¾"	birch	1
E	1⅛" diam.		9¾"	dowel	2
F	1" diam.		7⅛"	dowel	1
G	1" diam.		6½"	dowel	2
H	⅜" diam.		11/16"	dowel	6
I	⅜" diam.		8⅞"	dowel	2
J	⅜" diam.		4¼"	dowel	2
K	½"	¾"	9½"	birch	2
L	½"	2"	9¾"	birch	1
M	¾" diam.		½"	dowel	2
N	⅛" diam.		1½"	dowel	4

Supplies: #8×1¾" flathead wood screws with 3/16" finishing washers, clear finish

⅜" hole ⅜" deep on top for the back posts, also ¼" hole ⅜" deep on bottom for legs

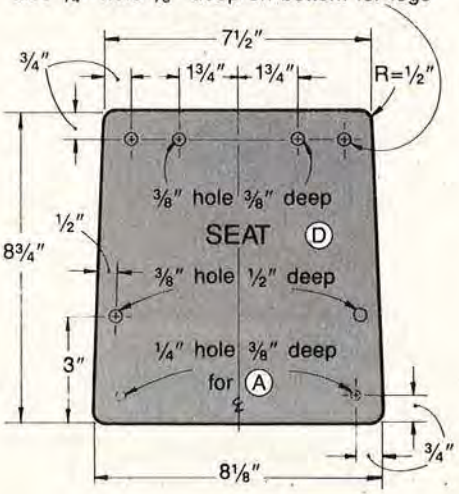

SCHOOLTIME DESK

1 Rip, then miter the eight pieces that make up the desk's legs (A) to size. Now, cut the stretcher (B), the seat support (C), and the dowel pins (D) used to fortify the leg joints, and the desk top (E) to size. Refer to the Parts-View Drawing when cutting C to shape.

2 Cut a ¼" dado ⅜" deep in the center of two of the leg parts and the stretcher. Cut a tongue on each end of the stretcher, and one on the end of the seat support.

3 Glue and clamp the legs together. Drill ¼" holes 1½" deep at each joint, then glue and install the dowel pins (D). Sand the legs smooth and the dowel pins flush.

4 Route a pencil rest (¼" vein) in the top surface of the desk top where shown in the Exploded-View Drawing. Then glue and clamp the stretcher (B) and the desk top (E) between the legs (see the Side-View Drawing for how to position the desk top). Drill pilot holes for the screws and plugs to join A to E. Drive the screws and glue the plugs over the screw heads.

5 Glue the seat support (C) to the stretcher (B). Cut the seat (F), the backrest support (G), and the backrest (H) to shape as dimensioned in the Parts-View Drawing. Glue and screw the seat to the backrest support (see the Side-View Drawing).

6 Glue and screw the backrest to the backrest support, using #8 × ¾" wood screws covered with ⅜" plugs.

7 Round off sharp edges, sand the desk smooth, and apply the finish. ■

Bill of Materials					
Part	Finished Size*			Material	Qty.
	T	W	L		
A	¾"	1¼"	7"	birch	8
B	¾"	1¼"	10½"	birch	1
C	¾"	2½"	10⅛"	birch	1
D*	¼" diam.		1½"	dowel	8
E	¾"	6"	9¾"	dowel	1
F	¾"	6¼"	7½"	birch	1
G	¾"	2"	6¼"	birch	1
H	¾"	2"	6⅜"	birch	1

*This part is cut larger initially, then trimmed to finished size. Please read instructions before cutting.

Supplies: #8×2¼" flathead wood screws, #8×1½" flathead wood screws, #8×¾" flathead wood screws, clear finish

Project design: Jim Boelling
Photograph: William Hopkins
Illustrations: Bill Zaun, Randall Foshee

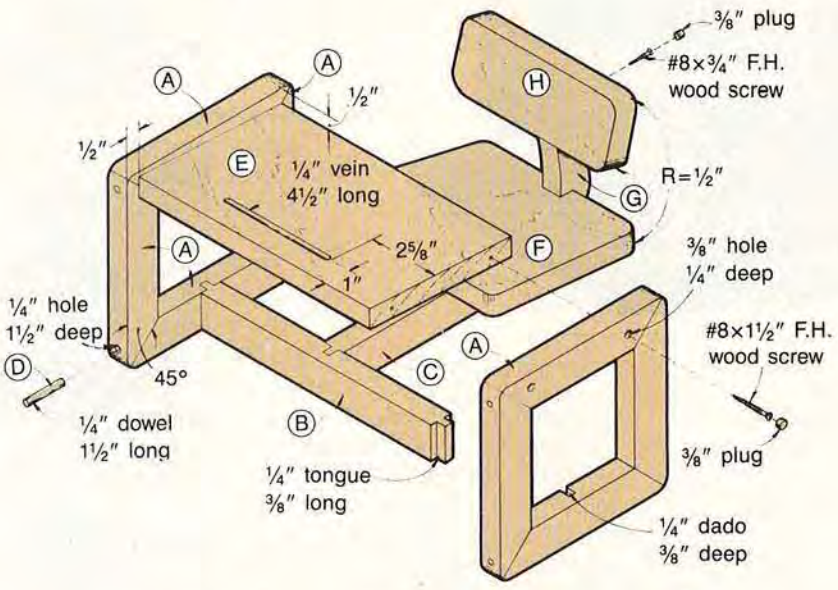

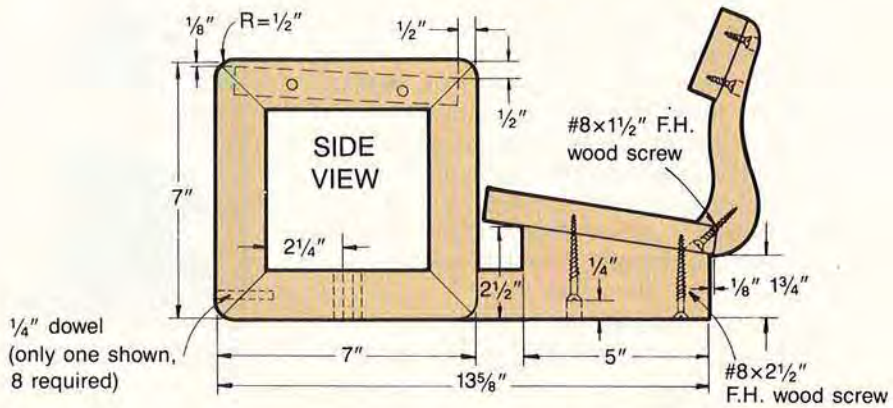

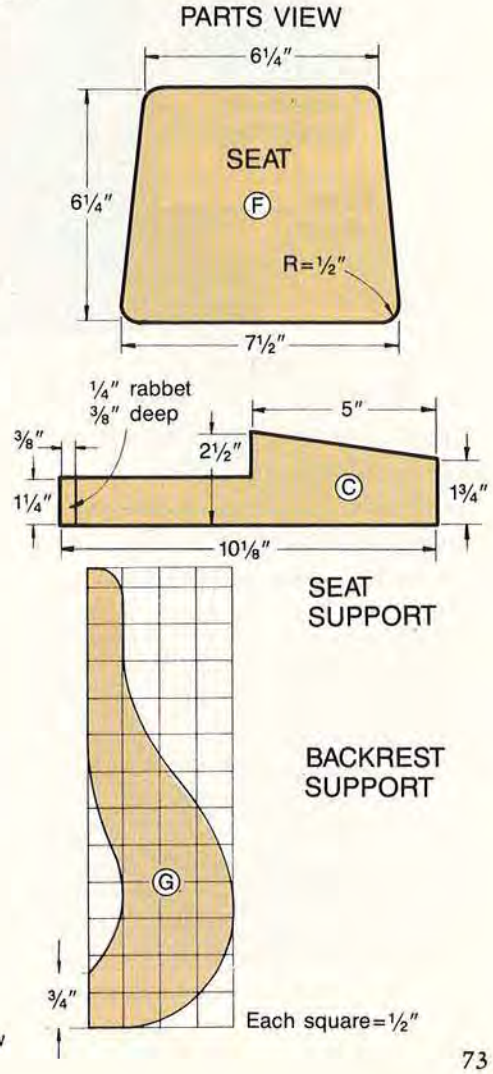

Print this article

PALM-GRIP SANDERS

BIG SELLER . . . SMALL WONDER

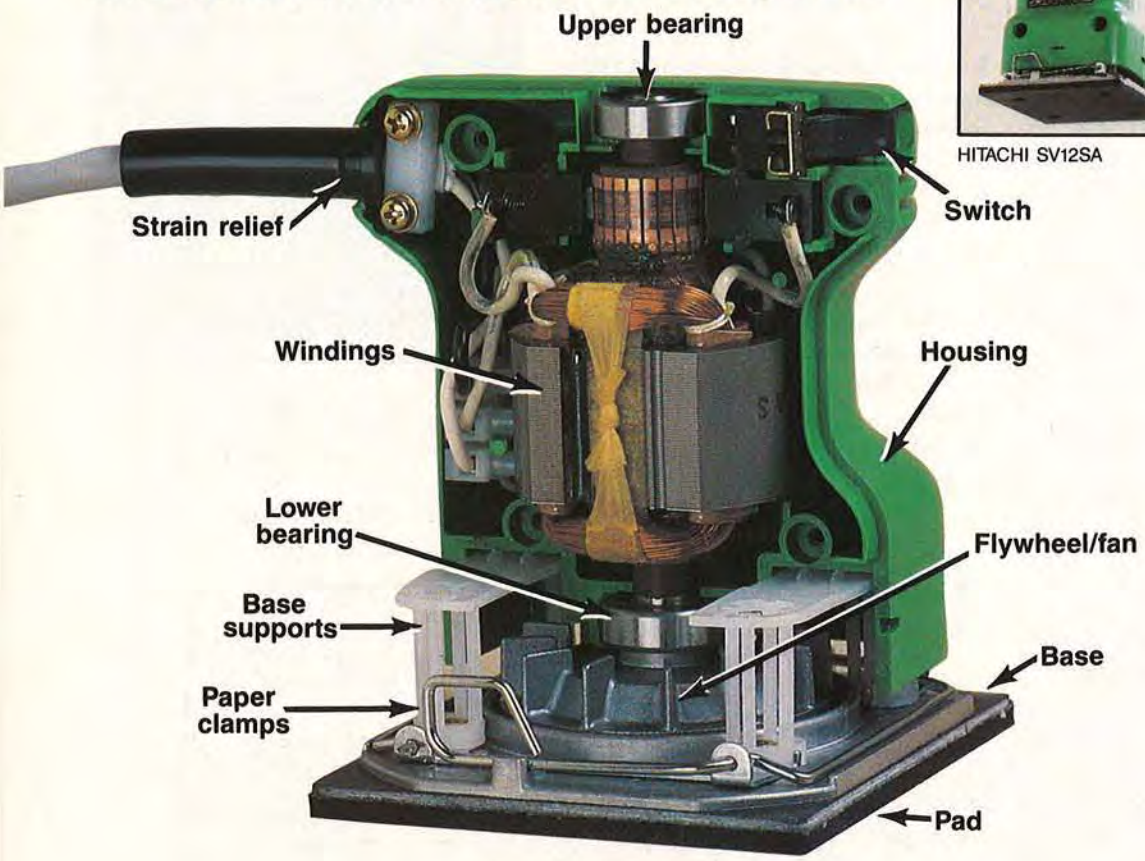

BLACK & DECKER 4010

HITACHI SV12SA

BLACK & DECKER 7443

MAKITA B04510

MAKITA B04530

PORTER-CABLE 330

RYOBI S-500A

SEARS 9GT11601

After 20 years in the shadow of their big cousins in the sander family, orbital palm-grip sanders are catching on fast among home woodworkers.

Back in 1965, Porter-Cable introduced its 330—the first, and for years the only, palm-grip ¼-sheet sander on the market. But since P-C products are distributed primarily through commercial dealers, most home woodworkers remained unaware of this remarkable tool.

Then, in 1978, Makita introduced its B04510 and the marketing battle was on. In the past two years, three other companies—Black & Decker, Ryobi, and Hitachi—have produced their versions of this handy little smoothing machine.

B&D offers the only two models targeted specifically for the home market. As in all "consumer" tools, the two B&D sanders have lighter housings, bearings, and other parts—and, at about $40 and $50 respectively, they cost less than the pro models.

Most palm-grip sanders are more durable "commercial" tools, priced in the $70 to $80 range.

However, keep in mind that with the discounts that are available through many mail-order houses, you can purchase even these sanders for $35 to $60.

Three key advantages

Several features are sparking the growing popularity of palm-grip sanders:

First, they are compact and lightweight (ranging from just under 2 to 3.75 lbs.). This makes them ideal for smoothing cabinet face frames and small, hard-to-reach areas. You'll find palm grips much less fatiguing to use on vertical surfaces or above your head on, say, a large hutch or wall system.

Second, palm grips are designed for one-handed operation—without sacrificing control. This holds true on narrow and irregular surfaces as well as on small, flat areas.

Finally, all palm-grip sanders operate at a speedy 12,000 orbits per minute (OPM). Compare this to the 3,000 OPM of most consumer ⅓- and ½-sheet sanders, or even to the 10,000 OPM of most large commercial ½-sheet models. At this speed, you can sand your woodworking projects quickly and with excellent finished results.

Size, the obvious drawback

Palm-grip sanders offer almost unlimited versatility—except for their size. Since they are quite small (all models except Ryobi use ¼ sheet; the Ryobi uses only ⅛ sheet), palm grips are not the best choice for large surfaces such as cabinet doors or tabletops.

With slightly less than half the sanding surface of a large ½-sheet pad sander, you need to change paper more often and work longer to cover the surface. On large surfaces, the paper must be in contact with the wood for almost twice as long to compensate for its size. This additional friction heats up the paper, which then tends to wear out more quickly.

Clearly, you want to reach for a 10,000 OPM or better ⅓- or ½-sheet sander rather than a palm grip when doing large surfaces.

WHAT TO LOOK FOR

With only six manufacturers and 10 models to choose from, selection is narrower than with most other power tools. But there are some important distinctions to consider:

THE HAND GRIP

All palm-grip sanders except the P-C are designed so that you can hold them by the "saddle horn" at the top of the case. The P-C has a ball-and-knob grip instead. Both alternatives give good control—with a few variations.

The P-C design is more stable at the edges of a project—there's less tendency to roll off the surface and to round corners. Unfortunately, P-C's grip design adds considerably to the height of the sander.

That's part of the reason other manufacturers have gone with the more compact design, which permits you to squeeze into some very tight spots while sanding your projects. Ryobi even opted for a ⅛-sheet design that accommodates lower heights and shoehorns into narrower spaces than the other models.

Porter-Cable ball-and-knob grip

Hitachi saddle-horn grip

THE SANDING PAD

You can take your choice of three materials when it comes to sanding pads: felt (P-C and Makita), dense foam (Hitachi, Black & Decker, Sears, and Ryobi), and firm neoprene rubber (Makita 6″ round pad and the Hitachi 5″ round pads or 4″ square pads).

Felt pads are firm without being hard and generally maintain their shape best. They conform to broad curves but still knock off small imperfections without taking on the shape of the sanded surface—or of the paper clamped tightly over the ends.

Foam, on the other hand, "gives" a bit more and conforms better to irregular surfaces. (P-C also offers an extra-thick foam pad for folks who sand autos and boats with lots of curved surfaces.) Unfortunately, foam pads mold to the curve of the paper clamped on the ends. They also tend to bend out of shape and

Makita self-adhesive paper disk

Makita sanding a corner

Continued

need to be replaced more frequently.

Although the *neoprene* round-pad sanders are designed for comparatively expensive adhesive-backed sanding disks, the round base plate has two advantages: You can change the paper quickly, and—with the tapered rubber edge extended far from the sander body—you can sand in a vertical corner without the risk of marring the surface with part of the metal base.

(Here's a tip: You can save on the cost of purchasing adhesive-backed sanding disks by cutting standard sheets and using spray-on adhesive to make your own.)

PAPER GRIPS

All square-pad palm-grip sanders use variations of the wire hold-down or spring-tensioned clamp paper-holding devices. Both systems are adequate, yet each has problems.

The *wire hold-down* is, in most situations, the simplest to use. A simple flip of the finger releases the tension and leaves you free to use both hands to slip the paper into the locked position, flip the machine around, and attach the other end. The problem arises when the wire starts to lose its tension from repeated use (the wires are not made of spring steel) and the paper begins to slip. Fortunately, these bent-wire grips are inexpensive and simple to replace.

Sears wire hold-down

Porter-Cable removable clamping lever

Makita fold-down clamping lever

Ryobi paper-clamp lever

The *spring-tensioned* clamp comes in three variations—one from each manufacturer. P-C's clamp works with a lever that you insert into a slot in the nose of the clamp. When you use the lever (by the way, there's no provision for storing the lever when not in use) it's a smooth, one-handed operation. Although not as convenient, you can use a screwdriver for a lever.

Makita's paper-grip system uses a swing-away lever attached to the clamp so that it locks out of the way when not in use. This setup isn't quite as comfortable to operate because of the angle on the lever, but you don't have to worry about misplacing the lever, either.

The Ryobi sander has finger levers catercorner to each other that let you loosen one or both clamps with a convenient, one-handed maneuver. There's no lever to lose, nor do you need to swing anything out of the way.

All spring-tensioned clamps are much more durable than the wire hold-downs. That means fewer repairs (but when they do go, the replacement cost is greater). *Note:* When the warranty period on your palm grip expires, you can order paper grips and pads through your local dealer, mail-order houses, or direct from the manufacturer.

Sand or scrape?

Some woodworking purists avoid any type of mechanical finish-sanding, preferring instead to scrape their projects smooth. At *WOOD*, we think there's a place for both methods.

True, an orbital sander such as the palm-grip models in this article, can leave a minute, swirling pattern on the surface and "fuzzing" of the wood fibers—something you don't get with the clean cutting action of a sharp cabinet scraper. In some instances, especially for molded surfaces, a scraper is indeed your best tool. Properly sharpened, it will give you an excellent final surfacing prior to finishing.

But we think a good palm-grip or other high-speed finish sander, followed by a light scraping if you wish, also can deliver perfectly acceptable surfaces for most final finishes—and for considerably less elbow grease.

Pad sanders: three quick tips

1. When you use standard-sized sheet sandpaper, install two sheets at a time. If you tear the first layer, the inside piece will both protect the pad from damage and prevent scuff marks on your project.

2. When sanding close to a wall, stick two or three layers of masking tape over the metal base plate edges on the sander. This will cushion the blow if you happen to bump the sander into the wall.

3. Make a simple paper-tearing device like the one shown here to help you size your sheets quickly. (Never use good scissors to cut sandpaper—the abrasive quickly dulls them.)

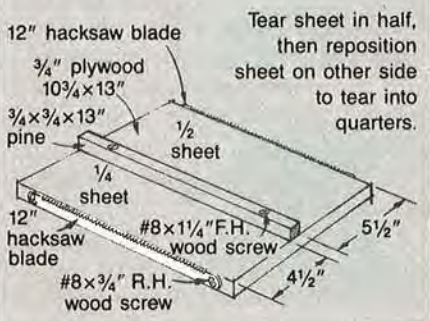

PALM-GRIP SANDERS COMPARISON CHART

Manufacturer	Model number	Paper size (in sheet fraction)	Paper clamp type	Pad type	Bearings	Orbits per minute (OPM)	Amps	Cord size/type**	Cord length	Height	Weight (lbs.)	Dust extraction (Y/N)	Suggested list
Black & Decker Consumer	7443	¼	Wire	Foam	Ball & sleeve	12,000	1.5	18·2/SJT	8′	5⅛″	1.875	N	$40.95
Black & Decker Consumer	7445	¼	Spring clamp	Foam	Ball	12,000	1.5	18·2/SJT	8′	5⅛″	1.875	N	51.95
Black & Decker Commercial	4008	¼	Wire	Foam	Ball	12,000	1.2	18·2/SJ	8′	4⅜″	2.625	N	76.00
Black & Decker Commercial	4010	¼	Wire	Foam	Ball	12,000	1.2	18·2/SJ	8′	4⅜″	2.625	Y	82.00
Hitachi	SV12SA	¼*	Wire	Foam	Ball	12,000	1.7	18·2/SJT	8′	5¼″	3.3	N	79.00
Makita	B04510	¼	Spring clamp	Felt	Ball	12,000	1.8	18·2/SJT	9′	5″	2.4	N	79.95
Makita	B04530	6″ round	Adhesive-backed paper	Neoprene	Ball	12,000	1.8	18·2/SJT	9′	5″	2.4	N	79.95
Porter-Cable	330	¼	Spring clamp	Felt	Ball	12,000	1.2	18·2/SJ	7′	7¼″	3.75	N	85.50
Ryobi	S-500A	⅛	Spring clamp	Foam	Ball	12,000	1.5	18·2/SJ	9′	5⅛″	2.6	N	70.00
Sears	9GT11601	¼	Wire	Foam	Ball	12,000	1.2	18·2/SJT	8′	4⅜″	2.625	N	69.99

*Square pad can be exchanged for 5″ round pad. **18·2 = 18 gauge, 2 wire SJT = plastic SJ = rubber

THE B&D DUST EXTRACTOR

Black & Decker is the only company to develop any kind of dust collection system for its palm-grip sander. B&D refers to it as a dust extractor, and it's available only on commercial units.

The idea is to remove enough dust from the sanding surface to keep the abrasive grit from clogging quickly. If the sandpaper stays rough and air circulates more freely between the sander and the project, the paper stays cooler and lasts longer. It makes sense.

By using the paper punch furnished with this B&D model, you open holes in individual sheets that increase the suction action. If you don't use the punch, B&D has molded troughs leading to the edge of the sander to collect dust from the sides. If the bag gets in the way during some job, you simply remove it and cover the hole with the plug furnished.

Black & Decker paper-punch jig for dust extractor

WHERE TO WRITE

For more extensive product literature about palm-grip sanders, write to the mail-order distributors of these products whose ads appear in this magazine. Or contact the advertising departments of these companies at the following addresses:

- Black & Decker (U.S.) Inc., 701 Joppa Rd., Towson, MD 21204.
- Hitachi Power Tools USA, 4487-F Park Dr., Norcross, GA 30093.
- Makita USA Inc., 12950 E. Alondra Blvd., Cerritos, CA 90701.
- Porter-Cable Corp., P.O. Box 2468, Jackson, TN 38301.
- Ryobi American, 1158 Tower Lane, Bensenville, IL 60106.
- Sears, Sears Tower Building, Dept. 703 BSC-40-15, Chicago, IL 60684. ■

Photographs: William Hopkins
Illustration: Herb Dixon

Clearly Classy OAK COFFEE TABLE

This good-looking project is a challenge to build and a pleasure to behold.

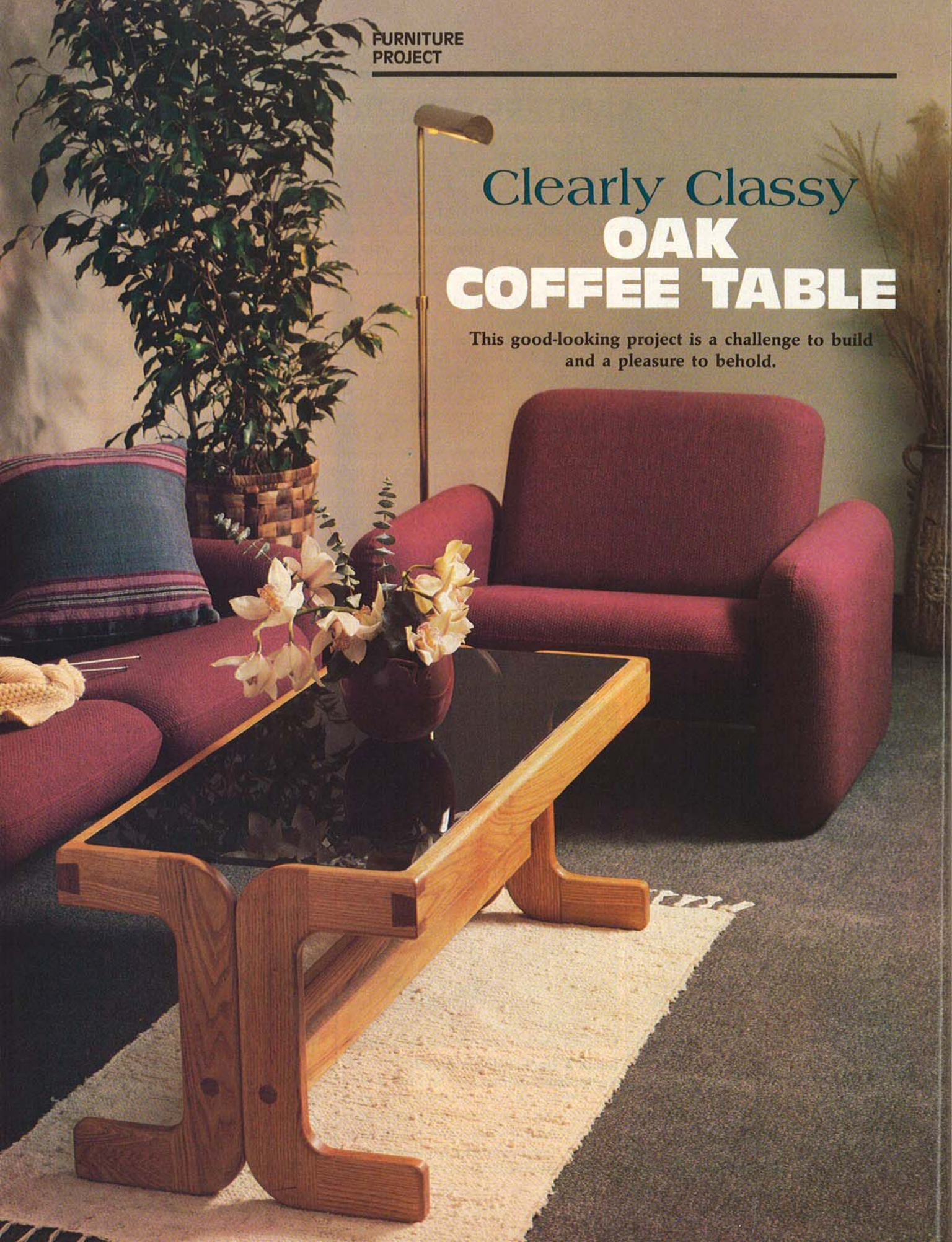

We think you'll agree that this sleek coffee table represents one of the best contemporary project designs you've seen in a long while. It's also an opportunity to test your skill at making open mortise and tenon joints, as well as dovetails. While we selected smoked glass for the tabletop, you could substitute acrylic or even solid wood.

BUILDING THE TABLE LEGS

1 Rip, then crosscut table parts A, B, and C to the dimensions listed in the Bill of Materials.

2 Lay out the tenon on each end of the A parts as shown in the drawing below, then make the two cuts with a band saw fitted with a sharp ⅜" or ½" blade. We clamped a stop on the band saw fence to ensure a 4"-long cut on all pieces. Now crosscut the remainder with a table saw, radial arm saw, or dovetail saw.

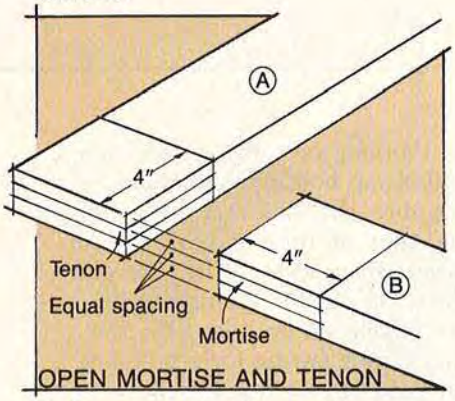

OPEN MORTISE AND TENON

3 Lay out and cut a mortise on one end of one of the legs (B) (see drawing above), using the band saw and stop as you did for the tenon.

Bill of Materials

Part	Finished Size T	W	L	Material	Qty.
A	15/16"	4"	9½"	oak	8
B	15/16"	4"	18"	oak	4
C	15/16"	3"	45"	oak	2
D	1 1/16"	2½"	42⅜"	oak	2

Supplies: 4—¼×3" lag screws with washers, ¼" hardboard for splines, ½"-diameter oak dowel rod, 1"-diameter dowel rod, finish of your choice, ⅜" smoked glass or acrylic

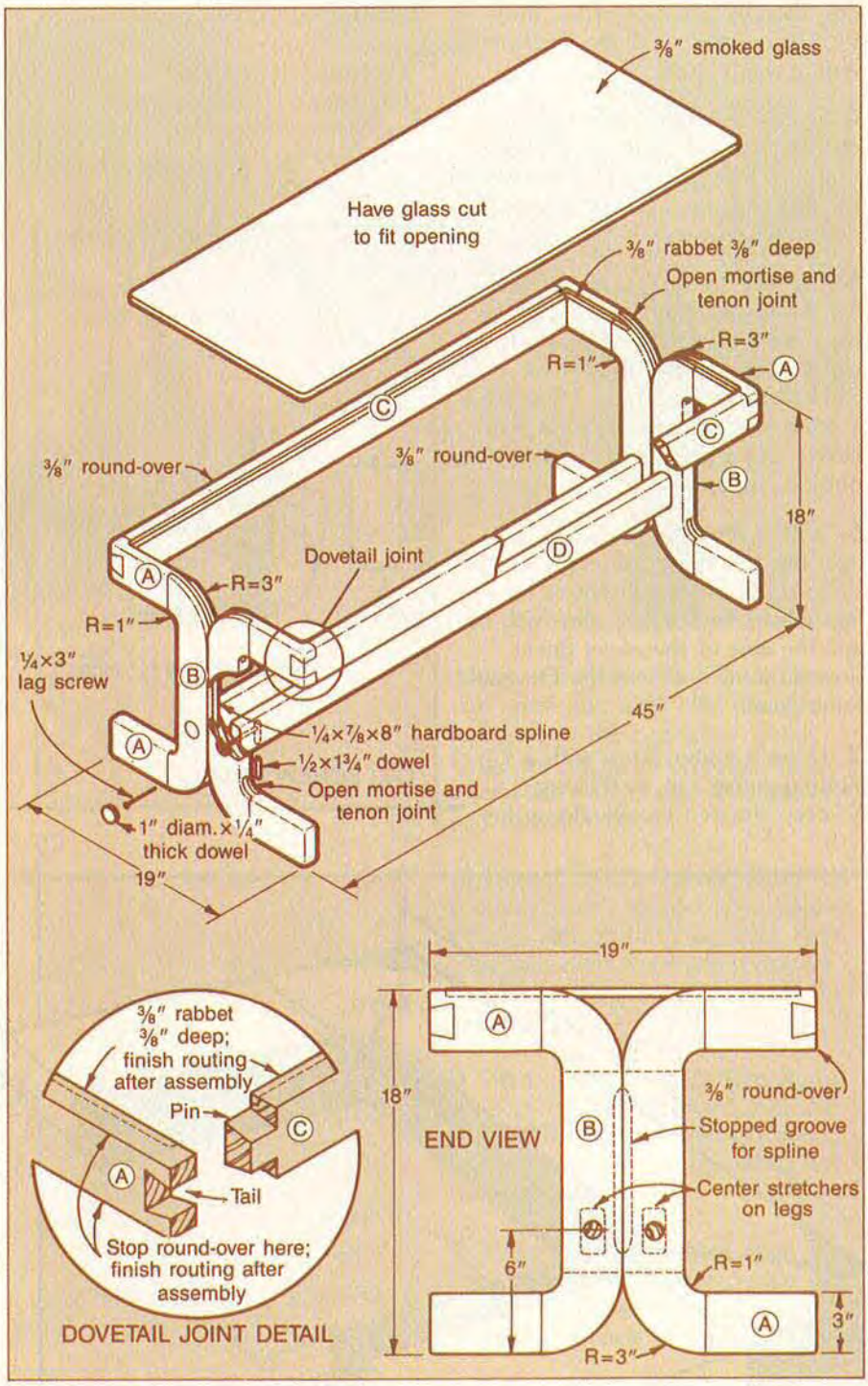

Cutting Diagram

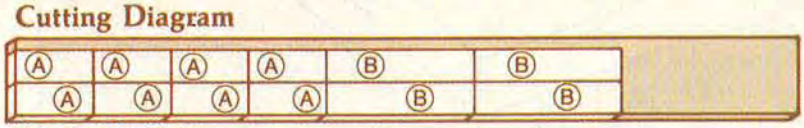

15/16×9¼×96" Oak

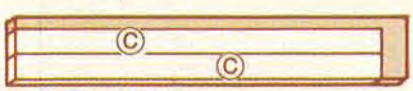

15/16×7¼×48" Oak

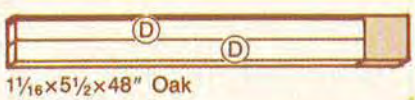

1 1/16×5½×48" Oak

Continued

Check the fit into one of the tenons, then cut the rest of the mortises. Now clean out the mortises with a sharp chisel.

4 Spread an even coating of glue on the mating surfaces of the mortises and tenons, then clamp each of the legs together. Check for square with a try square.

5 Lay out the final shape of each leg as shown in the drawing below, then use a band saw or jigsaw to cut the legs to their final shape. Sand all surfaces smooth. (We used a drum sander to smooth the inside curves and a belt sander to sand the outside curves.)

6 With a router and a ⅜" round-over bit, round-over all edges *except* those along the top inside of the legs where the smoked glass will fit and the area of the as-yet uncut dovetail joints (refer to the Dovetail-Joint Detail).

7 Using a router fitted with a ¼" slotting cutter, cut an 8"-long, ½"-deep stopped groove along the inside edge of each leg. (Center the groove top to bottom and side to side, as shown in the End-View Drawing.) If you don't have a slotting cutter, cut the groove on a router table fitted with a fence and a straight bit. You could also join the legs with dowels.

8 Using ¼" hardboard, cut four ⅞"-wide splines 8" long. Shape both ends of each spline to fit the groove. Then insert (but do not glue) the splines between the legs. The splines should fit snugly without creating a gap between the legs.

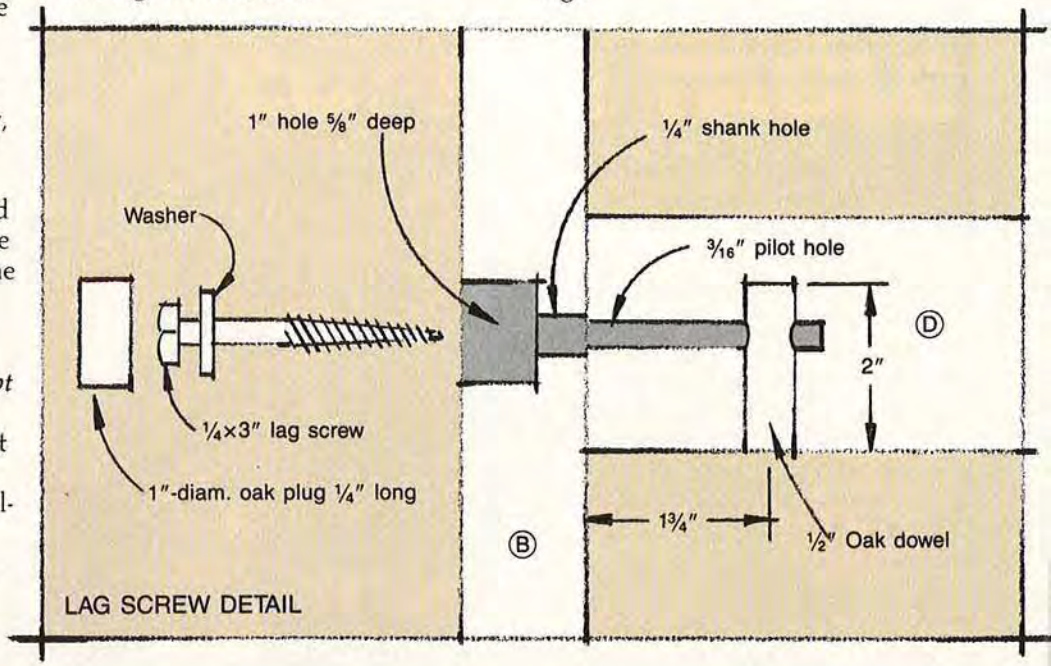

LAG SCREW DETAIL

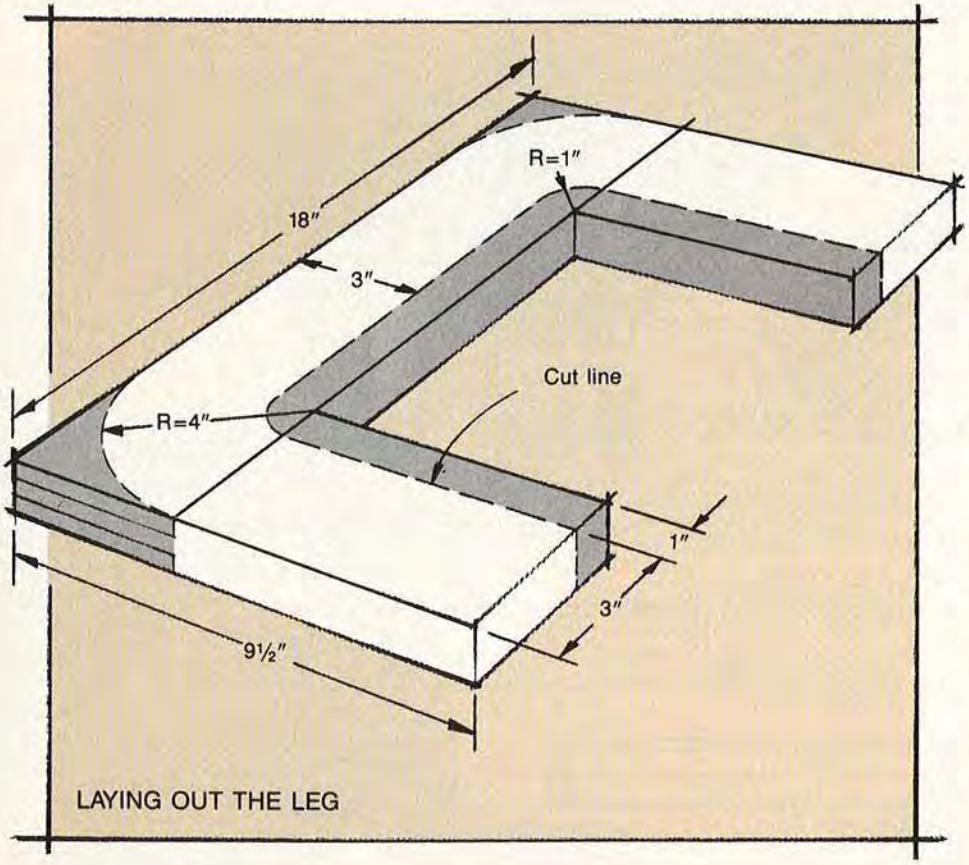

LAYING OUT THE LEG

9 Working on a flat surface, glue and clamp both leg assemblies together, checking that the bottoms and tops are flush and that the surfaces remain level. When the glue dries, lay out the location of the lag screw joint on both legs; see the End-View Drawing for positioning information. Drill a 1" hole ⅝" deep at each point, then drill a ¼" hole in the center of the 1" hole through the stock as shown in the Lag-Screw Detail. Prevent tear-out of the grain on the back side of the legs by backing them with scrap stock when drilling.

MAKING THE DOVETAILS

1 Lay out a pin at each end of each rail (C) as shown in the drawing at right, then make the cuts in the sequence indicated using a dovetail saw.

2 Lay out the leg assemblies (A-B) on a flat surface and use an X-acto knife to scribe the outline of the tails onto the ends of the top A

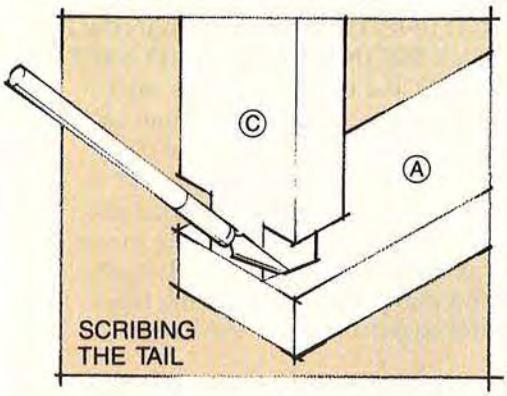

parts as shown in the drawing above.

Cut a tail on one end of A with a dovetail saw. Clamp a piece of wood squarely across the top of the tail and use it to guide your chisel to clean out the remainder as shown in the photo at right. After cutting the first tail, check that the pins on the ends of A fit snugly into it, then cut the rest of the tails.

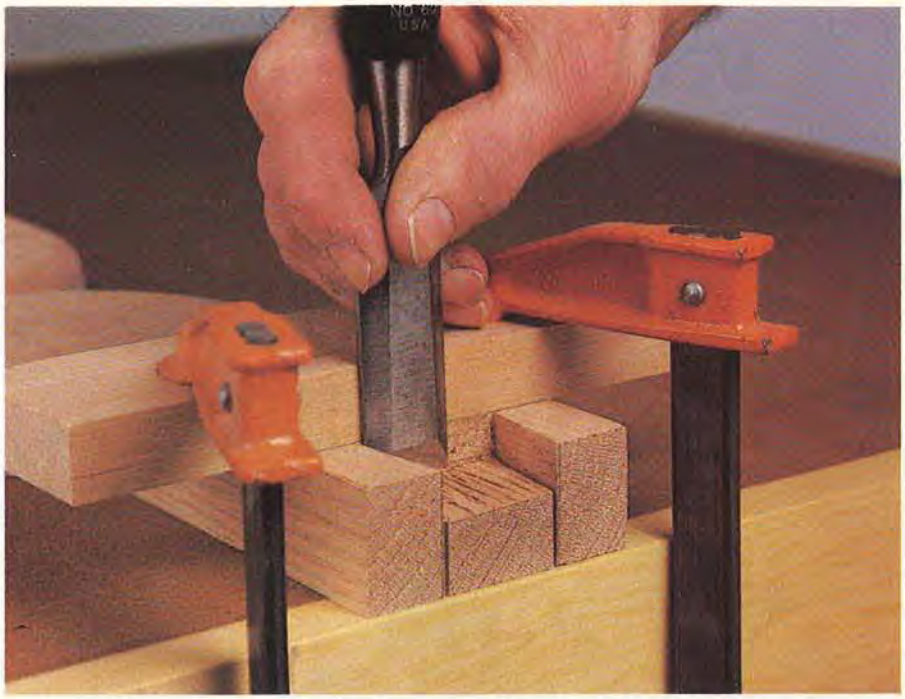

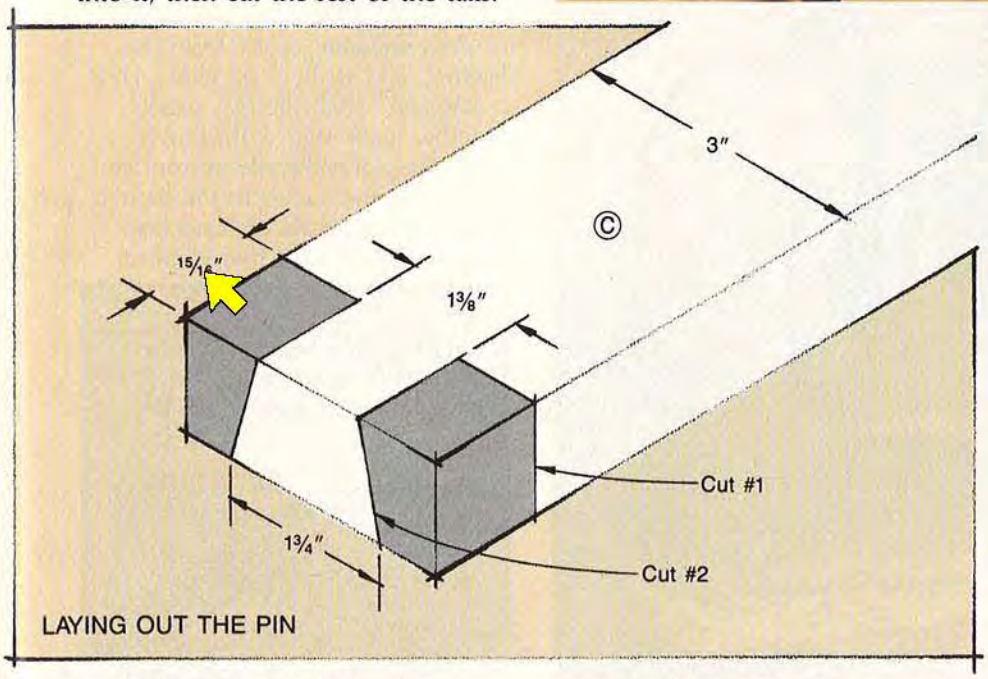

ASSEMBLING AND FINISHING THE TABLE

1 Rip, then crosscut the stretchers (D) to size. Measure in from each end of each stretcher and drill a ½″ hole 2″ deep as shown in the Lag-Screw Detail.

2 Glue, then insert a ½″ oak dowel 2″ long into each of the holes. (This whole process ensures a stronger joint between the legs and stretchers when the lag is screwed in place later.) After the glue dries, sand the dowels flush.

3 Glue and clamp the rails (C) and stretchers (D) between the leg assemblies (A–B) as dimensioned in the End-View Drawing. When the glue forms a tough skin, remove the excess.

4 Drill 5/16″ pilot holes centered in the previously drilled hole in the leg assembly and through the ½″ dowel in the stretcher. The hole will house the ¼×3″ lag screw, as indicated in the Lag-Screw Detail. Drive the lag screws through the leg assemblies and on into the stretchers and oak dowels.

5 From 1″-diameter oak dowel rod, cut four ¼″-long plugs (cut the plugs a hair on the long side), then glue and insert them into position to conceal the screws. Sand off the excess plug.

6 Rout a ⅜″ rabbet ⅜″ deep along the top inside edge of the legs and rails for the glass tabletop. Round-over all remaining edges with a ⅜″ round-over bit.

7 Finish-sand all surfaces, then apply the finish of your choice. (We used a natural oil finish covered with several coats of finishing wax.)

8 Take your project to a glass supplier and have the personnel there measure for the tabletop and cut it to size. This leaves less room for error in sizing the glass to the precise dimensions of the opening. ■

Project design: Paul Foster; Gary Hood
Photographs: Hopkins Associates
Illustrations: Bill Zaun

Print this article

Radio/Tape Player

THE WIRELESS UPDATED

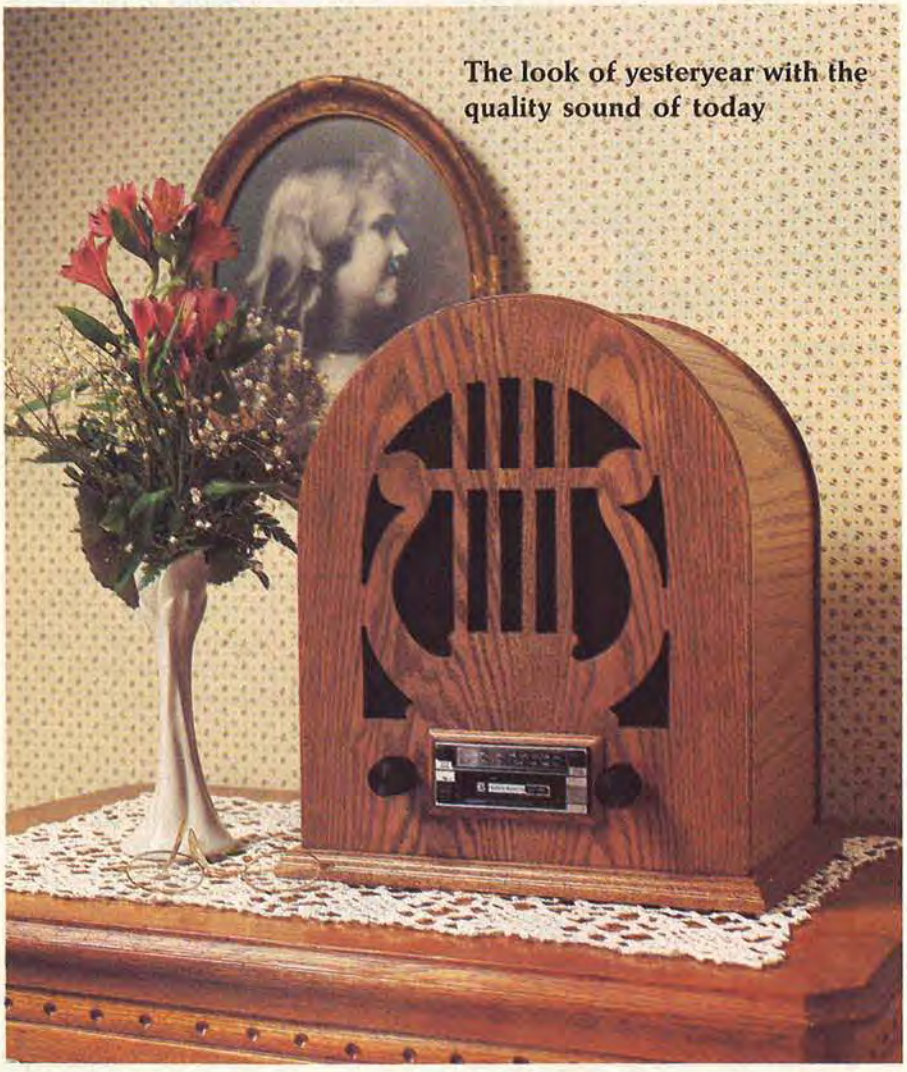

The look of yesteryear with the quality sound of today

Close your eyes and imagine. Maybe, just maybe, you'll be able to hear one of Franklin D. Roosevelt's "Fireside Chats" or Orson Welles' all-too realistic "War of the Worlds" broadcast on Halloween eve, 1938. Both aired on Cathedral-style radios very similar to our oak "wireless."

With a little cutting, bending and wiring, you can enjoy nostalgic styling without the worry of changing blown tubes. While you can install the radio of your choice, we chose an AM/FM radio/cassette player. Total cost for the wood and electronics gear was about $135; you can lower the cost considerably by using an old car radio.

GLUING UP AND MACHINING THE FRONT, BACK, AND BASE

1 Rip and crosscut enough solid oak to glue up the front panel (A), back panel (B), and the base (C). Cut the pieces 1″ longer and ¼″ wider for trimming to finished size later. Lay out and match the pieces for the best grain pattern, then glue and clamp them to form the front and back panels and the base.

2 Scrape off the squeeze-out. Then, square up the bottom and the sides of the front and back panels, trimming them to finished width as listed in the Bill of Materials. Leave the tops of A and B; they will be radiused and cut to shape later. Cut the base (C) to size.

3 Identify the face of the front and back panels with a pencil mark. Then draw a line down the center of each, measure up 8″ from the bottom, and scribe a 6″ radius with a compass. Stick the two panels together (faces out) with double-faced tape, aligning the bottom and sides. Cut the panels to the desired shape with a jigsaw or band saw. Sand until you have two identical arcs, then separate the panels.

4 Make a template of ¼″ hardboard and ¾″ stock as shown in the Routing-Template Drawing. Fit your

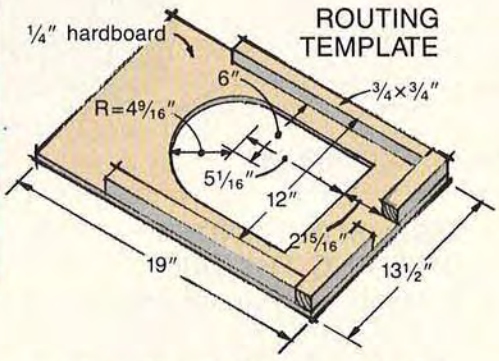

router with a ⅝″ bushing and a ½″ straight bit, clamp the template in position over the front panel, and rout a groove ½″ deep in the panel's back side as shown in photo A—see page 84. (We routed about 3/16″ deep at a time to avoid damaging the bit.)

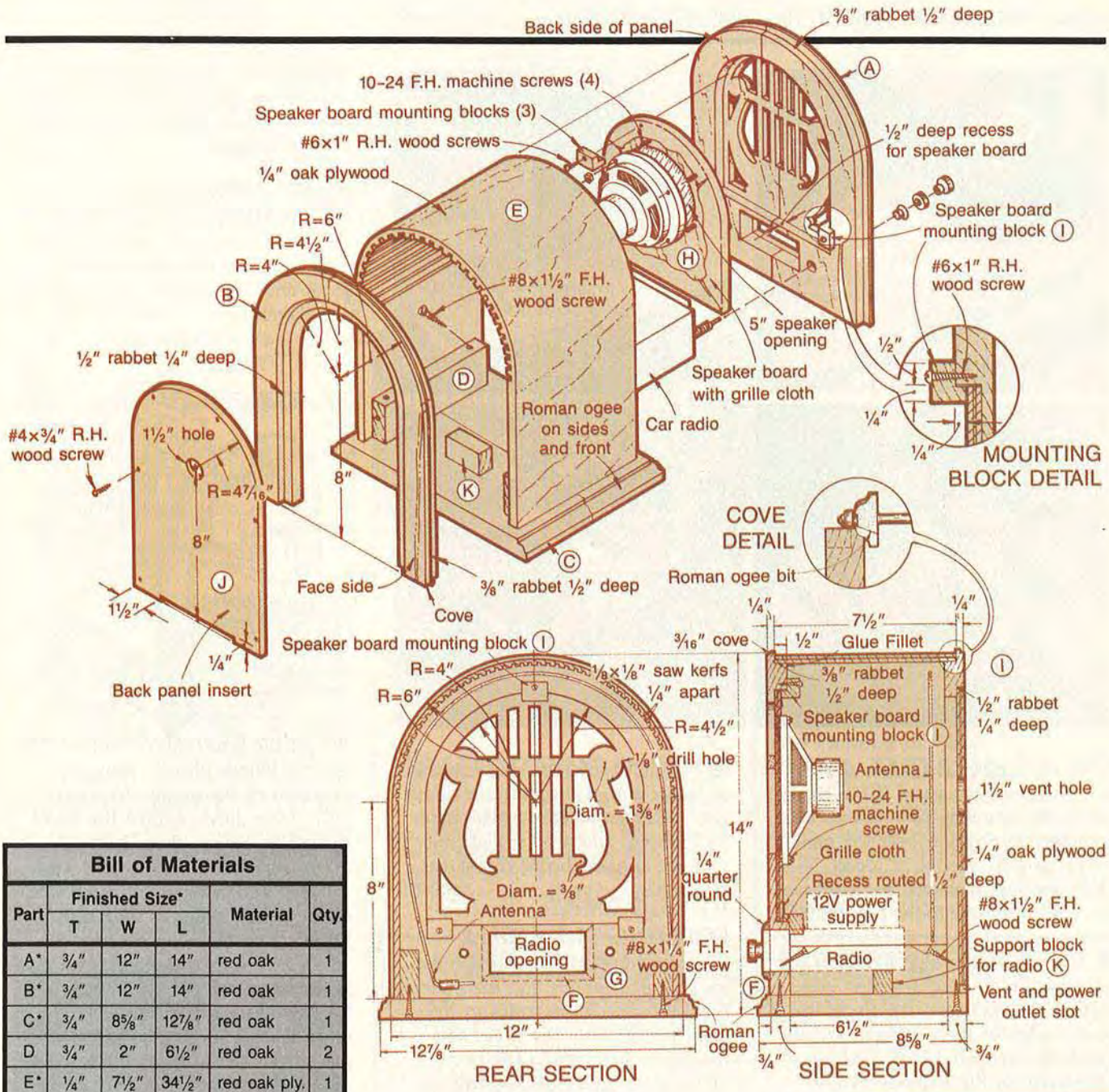

Bill of Materials					
Part	Finished Size*			Material	Qty.
	T	W	L		
A*	3/4"	12"	14"	red oak	1
B*	3/4"	12"	14"	red oak	1
C*	3/4"	8 5/8"	12 7/8"	red oak	1
D	3/4"	2"	6 1/2"	red oak	2
E*	1/4"	7 1/2"	34 1/2"	red oak ply.	1
F*	1/4"	1/4"	4 5/8"	red oak	2
G*	1/4"	1/4"	2 3/16"	red oak	2
H	1/4"	8 15/16"	9 7/16"	red oak ply.	1
I	3/4"	3/4"	1"	red oak	3
J	1/4"	8 7/8"	12 7/16"	red oak ply.	1
K	3/4"	1"	2"	red oak	1

*Some parts are cut larger initially, then trimmed to finished size. Please read the instructions before cutting.

Supplies: #8x1 1/2" flathead wood screws, #8x1 1/4" flathead wood screws, 10-24 machine screws/washers/nuts, #4x3/4" roundhead wood screws, #6x1" roundhead wood screws, 30" of #12 wire for antenna

Cutting Diagram

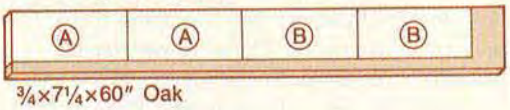

3/4x7 1/4x60" Oak

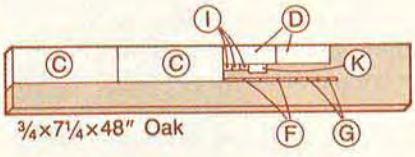

3/4x7 1/4x48" Oak

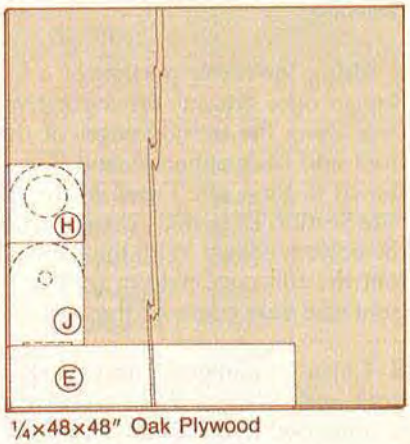

1/4x48x48" Oak Plywood

Continued

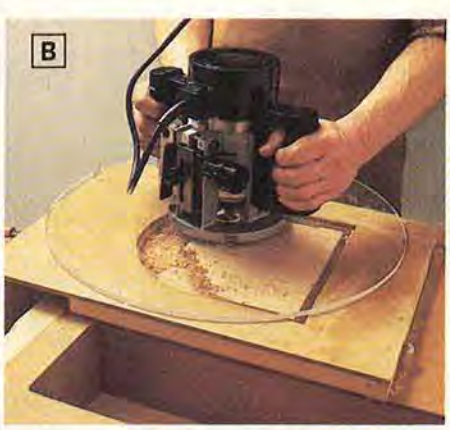

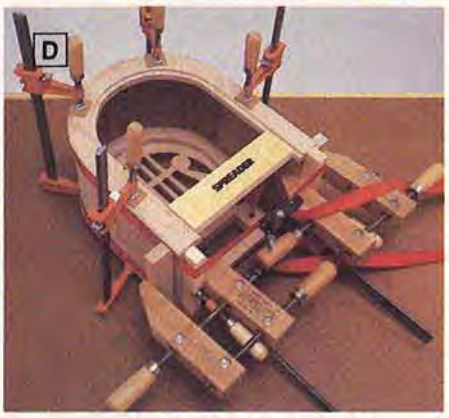

5 Now, remove the front panel and put the back panel (B) in the template (face side up). Clamp the template in position over the panel and rout a ½" groove ¼" deep. Slide the panel up, reclamp, and continue to rout the groove to the bottom of B.

6 Remove the back panel from the template, and using a coping saw, jigsaw, or band saw, cut along the inside edge of the routed groove to create the rabbeted U-shaped piece (B) shown in the Exploded-View Drawing.

7 Using the lower portion of a ½" Roman ogee bit, cut the decorative cove along the outside edges of the front and back panels A and B as shown in the Cove Detail in the Side-Section Drawing. Do *not* rout the bottom edges. With the same bit, rout the full ogee pattern on the front and side edges of the base (C).

8 Cut a ⅜" rabbet ½" deep in the front and back panels to accept the ¼" plywood hood (E) as shown in the Exploded-View Drawing.

9 Put the front panel back in the template and, using a router fitted with a large-diameter acrylic base, ⅝" bushing, and a ½" straight bit, rout the speaker board recess (see photo B).

FORMING THE GRILLE

1 Mark the position of the holes for the radio knobs and the opening for the front of the radio on the front panel. Drill the holes and cut the opening to size. (The position of the holes and opening will depend on your particular radio.)

2 Using ½" graph paper, enlarge the grid pattern for the grille (see the Grille-Grid Drawing on page 90). Then, with tracing paper, transfer the pattern to the face of the front panel. To enable you to remove the stock, drill ½"-blade access holes in the center of each opening, followed by ⅛" holes in each corner of each opening.

3 Using a scroll saw or jigsaw, saw out the grille pattern as shown in photo C. Then, sand the grille smooth (we wrapped and taped sandpaper around our jigsaw blade and turned on the saw to sand the pattern smooth).

MACHINING AND ATTACHING THE HOOD

1 Cut the two side cleats (D) to size, and glue them between the front and back panels as shown in the sketch below. After the glue dries, toe-screw both cleats to A and B.

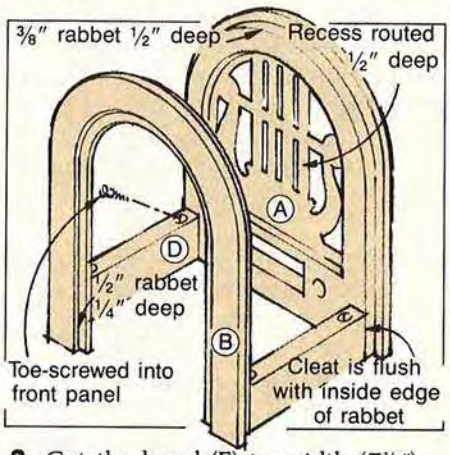

2 Cut the hood (E) to width (7½"), then to length plus 2" (note the direction of the grain). Measure 18¼" from either end of the hood to find its center, then lay out, mark, and cut twenty-five ⅛" kerfs ⅛" deep and ¼" apart on each side of the center point as shown in the Rear-Section Drawing on page 83.

3 Wet the inside and outside of the kerfed area with hot water to make it even more pliable. (We placed our piece under the kitchen sink and ran hot water over it.) Wipe the hood dry, then apply glue to the rabbets in the front and back panels. With a helper, wrap and clamp the hood into the rabbets as shown in photo D. (Note that we used a spreader to prevent the bottom of B from bending during clamping, as well as a variety of clamps to hold the assembly together.)

4 While the assembly is still clamped up, apply a fillet of glue where the hood meets the front and back panels on the interior. This adds strength to the assembly.

Continued on page 90

Order any Fine Tool
on this page for just

$9.95

Order any two for $19.90 and I'll throw in a Pocket Flashlight FREE!

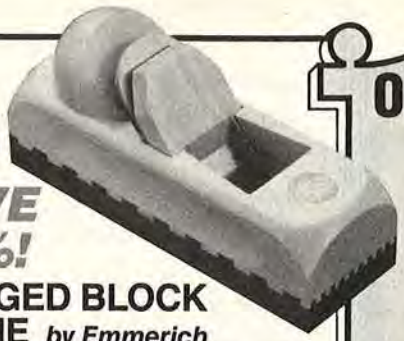

just $9.95

SAVE 55%!

WEDGED BLOCK PLANE *by Emmerich*

Beech, with a lignum vitae sole, and just 6" long – a comfortable fit in your hand. 1½" blade is excellent for general trimming. **109-1588, was $21.95**

Set of 3
just $9.95

World's Toughest SCREWDRIVERS

Smooth, comfortable, hardwood grips, securely riveted to the one piece, forged blade, make these the toughest screwdrivers you can abuse. **102-0040,** set of 3 (6", 8", 10") – the best $9.95 you ever spent!

just $9.95 *pair*

Lightweight, 15¾" Hornbeam

WOOD CLAMPS

Spring steel bars with quick-action cam capable of producing 350 lbs. pressure when fully locked. Jaw faces are cork lined to protect your work. **300-1153**

Disston 12" BACK SAW

Wood handle, Disston's best blade with 12 TPI. **You save over 40%! 117-1949, Disston list $19.00**

BRAD DRIVING PLIERS

They do just one job – and do it superbly! The moveable jaw squeezes a brad into your picture frame while the adjustable cushioned slide protects the frame edge. For moldings up to 3⅝" wide, 1¾" deep. **106-0010**

SAVE $3.00!

just $9.95

Our Famous 14 Piece

DRILL AND COLLAR SET

Brad point bits, specially designed for accurate wood drilling with no dancing, no skating, no skipping – ever! We include 7 bits (1/8", 3/16", 1/4", 5/16", 3/8", 7/16" and 1/2"), with a stop collar to fit each, so you'll never have to guess at drilling depth again! **200-0060, a $12.90 value**

Our Most Popular Bench Top Accessory!

Set of 3
just $9.95

Flush-Mounting BENCH STOPS

Easy to install – just chisel out a cavity and insert the stop. Easy to use – just turn the screw to raise the jaw, then press your workpiece against the teeth. Extra useful when you have a shoulder vise with built-in "dog". **300-0004, Originally $7.95 each**

Our Indispensable

HONING GUIDE

just $9.95

Complete with instructions. It maintains the proper angle for accurate honing of any type chisel or plane blade up to 3" wide. **103-0140**

SAVE UP TO 80%!

25 Assorted 1/2" Shank

Recipro Saw Blades

Made by Stanley, for wood, plaster, metal. Some blades not painted, some not printed. All first quality. **117-1960, LIMITED QUANTITY**

HURRY! SALE ENDS OCTOBER 15, 1985

the Fine Tool Shops

The Fine Tool Shops, Inc. Dept. **WMSF**
Box 1262, 20 Backus Avenue, Danbury, CT 06810

Ship to _____

Address _____

City _____ State _____ Zip _____

CALL TOLL FREE 1-800-243-1037

In Connecticut, 797-0772

☐ Send **FREE** Full Color Tool Catalog

Qty.	Item	Prod. #	Price ea.	Total
	Wedged Block Plane	109-1588	$9.95	
	Disston 12" Back Saw	117-1949	$9.95	
	Set of 3 Screwdrivers	102-0040	$9.95	
	Brad Driving Pliers	106-0010	$9.95	
	15¾" Wood Clamps, Pr.	300-1253	$9.95	
	Honing Guide	103-1040	$9.95	
	14 pc. Drill/Collar Set	200-0060	$9.95	
	Set of 3 Bench Stops	300-0004	$9.95	
	25 Stanley Recipro Blades	117-1960	$9.95	
	Pocket Flashlight – **FREE** when you order any 2 or more!			
			Subtotal	
			Shipping/Handling 1st item $2.00 Each add'l item, $1.00	
			CT 7½% Sales Tax	
			TOTAL enclosed	

☐ Check Enclosed
☐ Charge my ☐ AmExpress ☐ VISA ☐ MasterCard

Account # _____

Exp. Date _____

DO-IT-YOURSELF KITS

BUILD YOUR OWN GRANDFATHER CLOCK

Prices Starting Under **$280**
(including movement and dial)

- Do-it-yourself case kit, parts pre-cut
- Finished clocks
- Solid 3/4" hardwoods: black walnut, cherry, oak
- Heirloom quality
- Factory direct prices
- Solid brass West German chiming movements
- Money back guarantee
- Prompt shipment
- No woodworking experience necessary

WRITE FOR FREE COLOR CATALOG

EMPEROR® CLOCK COMPANY
WORLD'S LARGEST MANUFACTURER OF GRANDFATHER CLOCKS
Dept. 1622, Emperor Industrial Park
Fairhope Alabama 36532 · Phone 1-205-928-2316

I am interested in ☐ Do-It-Yourself Kits ☐ Finished Clocks

Name _____
Street _____
City _____
State _____ Zip _____
(please print)

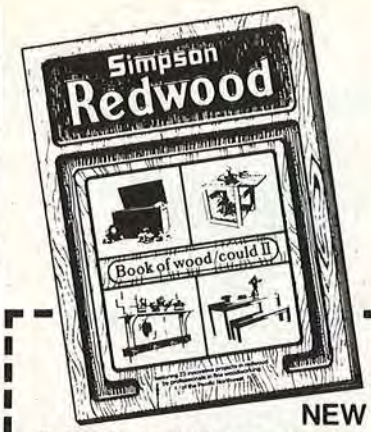

NEW BOOK OF WOOD/COULD II featuring

23 REDWOOD PROJECTS

. . . created by professionals in fine woodworking. Complete plans, working with wood tips, plus the fascinating story of redwood. $3.95

Enclosed is $3.95. Please send me a copy of the Redwood Book of Wood/Could II. (CA residents add 6% tax)

Name _____
Address _____
City _____
State _____ Zip _____

Simpson

Simpson Timber Company, California Operations,
P.O. Drawer V, Arcata, CA 95521 Dept. W-52

DO YOU USE OR COLLECT FINE HAND TOOLS?

ANTIQUE — OBSOLETE — MODERN

IF SO,

YOU SHOULD BE READING

THE FINE TOOL JOURNAL

PUBLISHED 10 TIMES ANNUALLY
1 Year Subscription—$10.00. Sample, $1.50

REMIT TO:
THE FINE TOOL JOURNAL
RD #2 — Dept. W85
Poultney, VT 05764

SAVE UP TO $500!

If you enjoy working with wood, there is an ***alternative to expensive power tools. Gil-Bilt kits!*** *Kits include patterns, parts, nuts & bolts - - all in numbered packages for easy construction. These are durable, high-quality tools that come with a five-year guarantee & continuous availability of replacement parts and supplies.*

***Kits** or **Plans** with FULL-SIZED patterns:*

- *12 & 18 in. Band Saws*
- *10 in. Tilt/Arbor Saw*
- *Comb. Drill Press/Lathe*
- *9 in. Tilt Table Saw*
- *6 in. Belt Sander*
- *Spindle Shaper*

To order kits or plans; ***CALL (314) 724-1812,***
Or send $1 for catalog; $6 per plan to:

GILLIOM MFG., INC.
Dept. BH9
1700 Scherer Parkway
St. Charles, MO 63303

Hand Crafted Desk by Oregon Fine Jointery.

TUNG OIL with URETHANE for greater durability

DEFT

Deft, Inc., Irvine, CA 92714. Alliance, OH 44601.

"Jorgensen"® AND "Pony"®

CLAMPS

Dependable extra hands for all types of clamping and work-holding jobs: woodworking projects, home maintenance, and furniture repair.

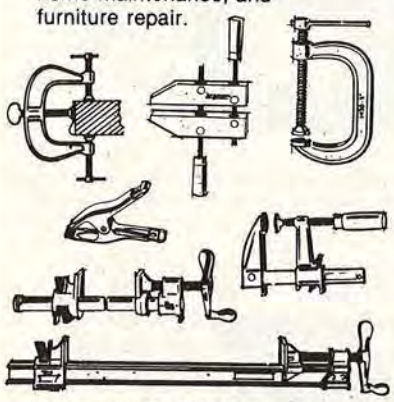

Write for FREE LITERATURE. For big 32-page "how-to-clamp-it" catalog, send 50¢.

ASK YOUR DEALER

ADJUSTABLE CLAMP COMPANY
THE CLAMP FOLKS
410 N. Ashland Ave./Chicago, IL 60622

SURFACE SANDER

Continued from page 53

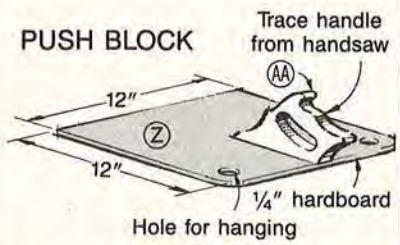

an eighth of a turn and sand to the desired thickness or smoothness.

BUYING GUIDE

● ***Threaded insert.*** (This provides steel threads for mounting the dust hood; it installs with a screwdriver.) Stock #D3960-¼" #20. 32 cents each from the Woodworkers' Store, 21801 Industrial Blvd., Rogers, MN 55374 (612-428-4101).

● ***Sandpaper strip.*** 2×75" self-adhesive strip; grits range from 40 to 320 and prices range from $3.40 to $3.90 per 75" strip. Available from Woodmaster Tools, 2849 Terrace, Dept. RW2, Kansas City, MO 64108 (800-821-665).

● ***Vacuum hose adapter.*** (Called a "flange ferrule" by Shopsmith.) 2¼" interior, 2½" exterior diameter, stock #AE0130. $3.50 plus $2.50 shipping. Shopsmith Inc., 750 Center Dr., Vandalia, OH 45377 (or call toll-free 1-800-543-7586).

● ***Power tool switch.*** Pull on/off, locking key, 6' of 3-wire cord, stock #9GT13632. $21.95 from Sears. To order, call your local Sears store.

● ***Ball bearing pillow block.*** Rigid-mount VPLE series, ⅝" bore with stop collars, stock #5X682. You can buy similar bearings at most machine supply dealers; we paid about $15/pr. Our local dealer obtained them from W.W. Grainger. You can write or call W.W. Grainger, 5959 W. Howard St., Chicago, IL 60648 (312-647-8900) to find a dealer in your area. ■

Produced by: Marlen Kemmet
Project design: Don Mostrom
Photographs: William Hopkins
Illustrations: Bill Zaun; Randall Foshee

Design a Custom Organizer Unit

Pick and choose from these wood workshop needs. Build an **Organizer Unit** custom designed for your personal woodworking.

	Description	Size	Price	Amt./Qty.
FURNITURE PARTS				
	Glue Pins (GP2)	3/8 x 2"	2.30/100	
	Glue Pins (GP1)	1/4 x 1-1/2	2.10/100	
	Shaker Pegs	3-1/2" long	3.00/12 21.50/100	
	Mug Pegs	3-1/4" long	2.64/12 19.40/100	
	Galley Spindle	2-1/8" long	3.05/12 17.60/100	
	Screw Hole Buttons	(PR6) Maple 1/4"	1.70/100	
		(PR7) Maple 3/8"	1.75/100	
		(PR12)Maple 1/2"	1.75/100	
		(S1K) Oak 3/8"	3.60/100	
		(S2K) Oak 1/2"	3.70/100	
		(S1W) Walnt 3/8"	4.55/100	
		(S2W) Walnt 1/2"	4.65/100	
		(S1C)Cherry 3/8"	4.55/100	
		(S2C)Cherry 1/2"	4.65/100	
	Round Head Plugs	(HL1) Maple 3/8"	2.50/100	
		(HL2) Maple 1/2"	2.55/100	
	Birch Candle Cups	1-3/8x1-9/16 tall	2.59/12 15.98/100	
	Birch Square Knobs with Screws	(KS1) 3/4"	2.16/12 15.00/100	
		(KS4) 1-1/2"	3.96/12 28.00/100	
	Birch Round Knob with Screws	(KR1) 3/4"	.90/12 7.70/100	
		(KR4) 1-1/4"	2.59/12 17.98/100	
	Plastic Shelf Pins	fit 1/4" hole	5.40/100	
	Description	**WOOD TOY PARTS Size**	**Price**	**Amt./Qty.**
	Premium Quality Maple Wood Toy Wheels	(W14) 3/4" dia 1/8" hole	3.50/100	
		(W15) 1" dia 3/16" hole	4.99/100	
		(W16) 1-1/4" dia 3/16" hole	7.99/100	
		(W8) 1-1/2" dia 1/4" hole	12.00/100	
		(W11) 2" dia 1/4" hole	4.25/12 18.75/100	
		(W7) 2-1/4" dia 3/8" hole	7.65/12 30.50/100	
		(W5) 2-3/4" dia 3/8" hole	7.80/12 54.00/100	
	Axel Pegs	(PR3) fits 3/16" hole	3.25/100	
		(PR2) fits 1/4" hole	4.10/100	
		(PR4) fits 3/8" hole	5.10/100	
	Wood People	fits 3/4" hole	2.20/12 14.50/100	
	Plastic Stoppers for Banks/ Salt Shakers	(P3) fits 1-1/8" hole	2.39/12 12.98/100	
		(P2) fits 1/2" hole	1.29/12 7.00/100	
	Caps for the ends of dowels	fits 1/4" dowel	3.75/100	
		fits 5/16" dowel	3.85/100	
		fits 3/8" dowel	3.95/100	
	Phillips Zinc Plated Flathead wood screws	3/4 x 6	1.36/100	
		1-1/4 x 8	1.98/100	
	Sturdy, interlocking plastic Bin Boxes (made in the USA) Each bin measures approximately 5" long x 4" wide x 3" high		Red .98 ea	
			Blue .98 ea	
			Yel .98 ea	
	FREE with every order: Page of preprinted bin labels for quick identification & a professional look FREE with every six bin boxes one wall hanger			
	Bin Dividers - makes two Compartments within each bin		pkg. of six 1.40/pkg	

For VISA & MC orders call 24 hours
916-581-4141

Subtotal
Cal-Residents Only, Tax 6%
Handling Insurance Fee $2.00
TOTAL ORDER

Free Catalog With Any Order:
For VISA and Mastercard Orders: Call 24 hours 916-581-4141

This unique woodworkers catalog describes hundreds of woodworking patterns, books, specialty parts and pieces, tools and many fine things to compliment your woodworking. Truly different from any other catalog. The catlog is included free with your order, or is $1 alone.

Name:
Address:
City/State/Zip
Phone:

Timbers, Lake Tahoe
Dept. T9, Carnelian Bay, CA 95711-0850

Continued from page 59

HEARING PROTECTION

HEARING PROTECTION DEVICES				
TYPE	APPROX. COST	NOISE REDUCTION RATING (in decibels)	DURABILITY (with typical home shop use)	COMMENTS
Foam plugs	15¢/pair	29–31	Days	Can be reused several times. One size fits all. Conforms to ear canal. Available with neck cord. Often misplaced. Foam can deteriorate. Washable. Wearer feels "plugged up." Must depress and fit into ear. Muffles all sound.
Pod plugs	$3.50/pair	22	Months	Convenient easy-on, easy-off. Worn under chin or over head. Washable. Silicone-covered foam comfortable, but poor seal. Can be draped over neck when not in use. One size fits all. Muffles all sound.
Silicone rubber plugs	$1/pair	26	Months	Soft, but difficult to insert. One size fits all. Small size easy to lose. Comfortable. Washable. Wearer feels "plugged up." Available with neck cord. Muffles all sound.
Cushioned muffs	$10 to $30/set	19–29	Years	NRR varies with how worn—over head, behind head, or under neck. Foam-filled pads have higher NRR. Fluid-filled pads most comfortable. Padded headband. Muffs swivel. Replaceable pads, seals, and liners on better-quality sets. Most expensive have several noise-absorbing liners. All are easy-on, easy-off. Muffle all sound.

For the Serious Woodworker... No more changing blades for rip, miter and crosscut — or for different kinds of material!

The WOODWORKER TWINS Make Every Kind of Cut A Lot Better And A Lot Longer!

We regretfully announce that Mr. Sawdust has separated himself from Forrest Manufacturing's sawblades so that his name will no longer appear. Quality and specifications remain unimpaired as always.

Jim Forrest, President and designer, microscoping cutting edge.

WOODWORKER I (For the ONE-Saw Shop) This is my *original* Woodworker blade — most desired by the American craftsman. Kerf: 3/32", 60 teeth. Modified triple-chip with micro-finish grind. Exclusive Forrest 400 carbide. **Perfect, polished cuts in every direction.** The one blade that does it all — for as long as you'll cut wood or plastics. Designed for use on *either* table — or radial — saw. **A MUST** for your radial. Available in 8", 9" and 10" diameters.

WOODWORKER II (For the TWO-Saw Shop) My new **ALL PURPOSE** blade — *primarily* for your table-saw 1/8" kerf. 30 to 40 teeth (see below). Modified alternate-bevel with micro-finish grind. Exclusive Forrest 400 carbide. Designed for super-fast and planer action in ripping heavy, solid stock with *glue-line quality* of cut. **We rip 2" Red Oak with 1 HP at the shows leaving surface smoother than a planer.** Slices ply-panels, particle-board and one-side laminates *quick* and *clean*. Crosscuts and miters with equal quality and ease and no bottom splintering. Generally, I recommend 40 teeth. However, if your ripping includes a lot of heavy 1 1/2" to 2" hardwoods, specify 30 teeth. See dampener information. Available in 8", 9" and 10" diameters.

We're proving everything we say in our ads — in major shows across the country.

WOODWORKER I

	WAS	NOW 40% OFF
10" 60T	$162	$97
9" 60T	156	94
8" 60T	150	90

WOODWORKER II

	WAS	NOW 40% OFF
10" 40T	$156	$94
30T	135	81
9" 40T	146	88
30T	125	75
8" 40T	136	82
30T	115	69

DAMPENER-STIFFENER One Side Aids A Smoother, Quieter Cut!! • Holds blade **rigid and true** for better cuts on your machine. • Dampens out **motor and belt** vibrations from being transmitted up to the rim of the teeth causing scratchy cuts. • Greatly reduces **cutting noise.** • Helps kill saw **scream-whistle** from any vibrating blade surface. • Is hardened and precision ground parallel and **flat within .001"** to keep your blade true. • Can be removed instantly if need requires for deep cuts. • One against the outside leaves blade **centered** in slot of **steel** table insert. • 6" dampener on 10" blade gives 2" cutdepth. Use 5" dampener if always in 1 1/2-2" deep cuts. Remove or use 4" for 3" cuts. For 8" and 9" blades, figure dampener size accordingly.

6" Dampener $23 • 5" Dampener $22 • 4" Dampener $20

WE RECOMMEND OUR FACTORY SHARPENING... 2-3 DAYS ON THESE AND ALL MAKES OF CARBIDE TIP SAWS.
NOW... ORDER the one blade that will outlast you! (10-20 sharpenings possible).

Your cutting satisfaction guaranteed or full cash or credit refund.

Dealer Inquiries Welcome.

We honor Amex, Visa & MasterCard, Money Orders, Personal Checks and CODs.

FORREST MANUFACTURING COMPANY, INC.
250 Delawanna Ave., Clifton, NJ 07014

FORREST

TO ORDER ***PHONE TOLL FREE!***
1-800-526-7852 *(In NJ: 201-473-5236)*

WOODWORKERS
FULL SIZE PATTERNS

Simple to make – Fun – Profitable

- 75 pattern packet plus "Shop Secrets"
- Over 50 "Folk Art" patterns
- 6 "Wind-Action" whirligigs packet
- 40 craft plaques plus projects
- 8 child pleasing aircraft packet
- 6 decorative magazine racks

Send $6.00 per blueprint packet or choose any 3 FOR ONLY $12.00.

ACCENTS, Dept. MA95
P.O. Box 262
Danvers, MA 01923

Brochure of 400 designs $2.00
(Free with order)

THE WOODWORKING/ HOMEBUILDING SHOW

for craftsmen & hobbyists

2 SPECIAL SHOWS!

- FREE WORKSHOPS
- 100 EXHIBITS
- DOOR PRIZES

for the professional craftsman and serious home hobbyist

DETROIT, MI
Sept. 13-14-15, 1985
Southfield Pavilion
26000 Evergreen Rd., Southfield, MI

SAN JOSE, CA
Oct. 4-5-6, 1985
Santa Clara Fairgrounds
344 Tully Rd.

Call (213) 477-8521 for further information.

With this ad $1.00 off general admission price of $5.00.

RECANE *for fun and profit*

Recane or re-rush heirloom chairs — for yourself or for others as a profitable hobby — with our full line of materials & instruction books.

Since 1934 America's largest selection of caning & basketry materials & supplies —

- **Superior quality weaving cane & machine woven cane**
- **Flat oval & round reeds**
- **Fibre & genuine rush**
- **Danish seat cord**
- **Raffia, rattan, seagrass**
- **Hoops & handles**

Illustrated catalog with complete how-to-do-it information, prices, order form: $1 (refundable with 1st order)

CANE & BASKET SUPPLY CO.
1283 S. Cochran, Dept. W, Los Angeles, CA 90019

PIN ROUTER

Speed and Precision at a Small Shop Price.

With the Award Winning Onsrud Inverted Router, templates are so simple it is economical to reproduce one part or hundreds.

Call or write for our free literature today.

See us at Booth 651, Los Angeles Convention Center, Sept. 19-22.

C.R. ONSRUD INC.

MODEL 2003

(704) 528-4528
P.O. Box 416, Troutman, N.C. 28166

Make Signs?

If you make or are interested in wood signs, you'll want SignCraft — the magazine for the sign artist. You'll see creative wood signs in every issue — carved, routed and sandblasted — plus how to's, pricing, technical help and more! Your satisfaction is guaranteed.

6 issues per year, just $21. Outside the U.S. — $24 (U.S. funds)

SignCraft Magazine
P.O. Box 06031-W, Ft. Myers, FL 33906

---

100 THINGS A KID CAN MAKE

PLANS • FULL SIZE PATTERNS

Easily made toys, games, gifts, bird houses, windmills, playthings, etc. A wonderful gift for your child, also splendid help for scout and youth leaders. "Fun With Tools," which also tells how to make things, is also included. All for $7 Prepaid 1st Class.

MASTERCRAFT PLANS, 910
PO Box 625, Redmond, WA 98073

Garden WINDMILLS

FULL SIZE PATTERNS

Beautify your lawn with these picturesque old windmills, 4 to 6 ft. high. Easy to make with full size patterns and step by step instructions. Only $7.00 Prepaid 1st Class for WINDMILL PACKET with patterns for both.

MASTERCRAFT PLANS WEST, Dept.919
PO Box 625, Redmond, WA 98073

BUILD IT YOURSELF

TOYS • PUZZLES • PLAQUES • PLANTERS
FURNITURE • LAWN ITEMS • BIRD HOUSES
ROCKING & RIDING HORSES • PLAY SETS

BLUEPRINTS

CREATE HUNDREDS OF ITEMS WITH SAME SIZE PATTERNS PLUS WHEELS AND BOOKS

ILLUSTRATED CATALOG $1

Design Group, Box 514-Z, Miller Place, N.Y. 11764

---

35 Years in Creative Arts & Trades

Van Dyke's

Presents a Supply Catalog for Upholstery, Antique Restoration, Wood Working & Related Trades!

VAN DYKE SUPPLY COMPANY · SUPPLIES FOR CREATIVE ARTS AND TRADES ·

Many Hard-to-Find Items!
SEND FOR YOUR FREE CATALOG:
Van Dyke's Supply Co., Dept. 55
4th AVE., WOONSOCKET, SOUTH DAKOTA 57385

QUARTZ

CLOCK MOVEMENTS
AND ACCESSORIES

- 5 YEAR GUARANTEE
- FREE Hour & Minute Hands
- 4 Shaft Lengths
  3/8" 9/16" 3/4" 7/8"

1 + $5.80 5 + $4.60 10 + $4.20 25 + $3.60
SECOND HANDS 1 + .30 50 + .25

PRECISION MOVEMENTS

2024 Chestnut St., P.O. Box 689
Dept. G, Emmaus, PA 18049
(215)967-3156

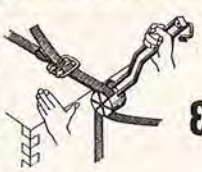

NEW...

CLAMP & STRAPPING KIT

Clamp odd shapes together with adjustable tension, reusable parts. Professional results at home prices using **MITY-TITE** components. For: cartons, beehives, storage, furniture, framing, gluing, car-tops, shipping, woodworking, cabinetry.
Kit includes: 150 ft. of strapping, 20 plastic and metal buckles, plus tension tool. Fully guaranteed.

Send to: **MITY-TITE** SYSTEMS 4229 1st NW, Seattle WA 98107
Name _____ Dept. WJ
Address _____
City _____ State _____ Zip _____

only $14.95
+ $1.70 FREIGHT & HANDLING
WASH. RESIDENTS ADD 7.9% TAX

Continued from page 84

5 After the glue dries, remove the clamps and spreader, then trim the excess hood flush with the bottom of the front and back panels.

6 Sand the hood assembly and base (C) smooth, then mount the hood securely to the base using #8 × 1¼" screws.

FINAL ASSEMBLY

1 Cut a piece of ¾" oak 1" wide and 17" long and rout a ¼" roundover on one edge. Rip this lineal piece to ¼ × ¼" to form the quarter-round molding (F, G). Temporarily position the radio in its opening, then miter and glue the ¼" molding around the front of the opening.

2 Cut the speaker board (H) to fit the routed recess behind the speaker grille. Lay out and cut the hole in H to accommodate the speaker. Drill holes to mount the speaker to H. Cut the mounting blocks (I) to hold the speaker board firmly against the grille. (We cut one lineal piece, routed the rabbet, then crosscut each I to finished length.)

3 Cut the back panel insert (J) from ¼" plywood to fit the rabbeted opening in the back panel. Bore a 1½" vent hole, 8" up from the bottom. Then cut a ⅜ × 6" wire access-vent opening centered along the bottom edge of J. Place J in position and drill pilot holes for mounting it to the back panel.

4 Finish-sand all the parts. Stain, if desired, and finish the radio housing. (We sprayed on four coats of clear finish.)

5 Install the radio and glue the radio support block (K) under the back of the radio to keep it level.

6 Screw the speaker to the speaker board. Cover the speaker board with black speaker cloth and staple it to the back side of the speaker board. Position the speaker board in the recess and secure it there with the mounting blocks (I).

7 Install the power supply and loop a piece of #12 wire on the inside of the speaker enclosure to form an antenna as shown in the Wiring Diagram. If you're using a stereo unit, you must wire in an additional speaker to protect the circuitry. (We placed our extra speaker several feet away from the radio.)

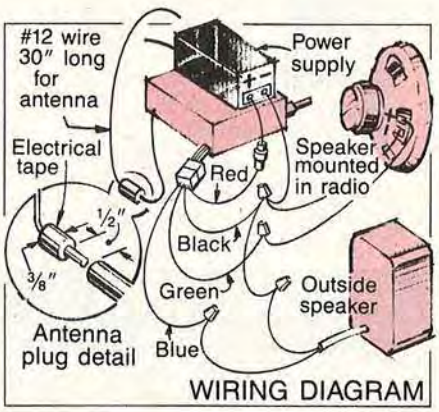

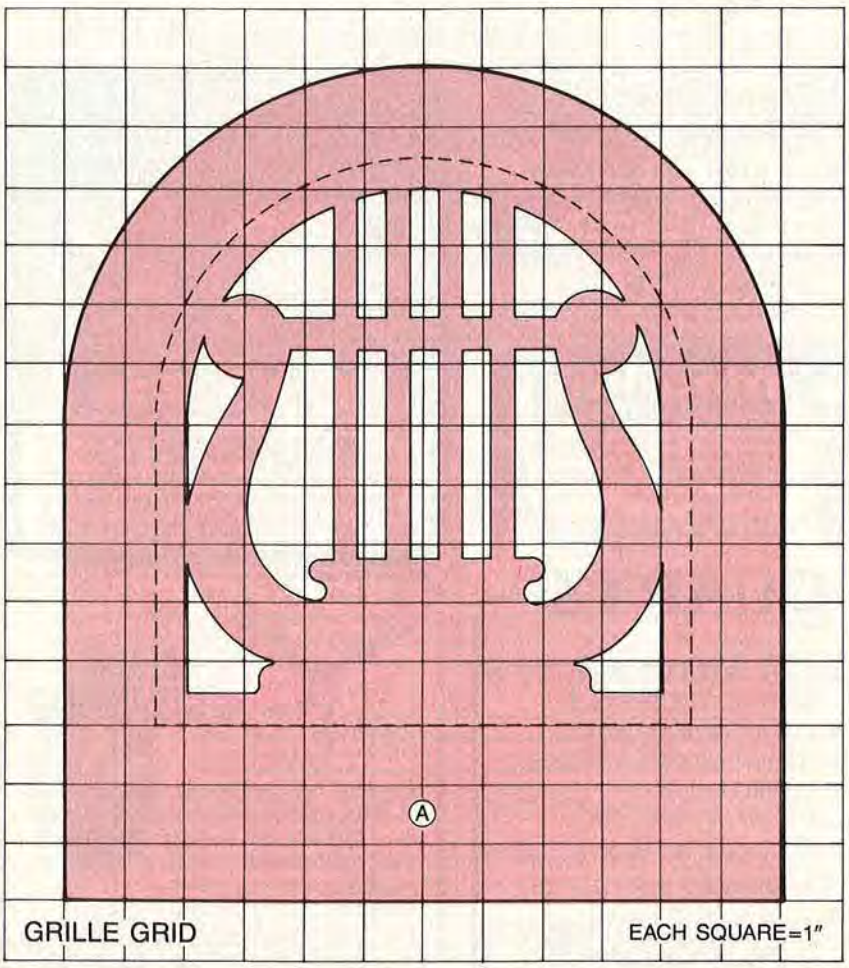

BUYING GUIDE

- ***Cassette player.*** Sears Dashmate, Auto-stop Stereo with AM/FM radio. Model #2850024. $59.95. Available at your local Sears store.
- ***Speaker.*** Wide-range speaker, 6" with whizzer, 9.8-oz. magnet. Catalog #40-1285. $11.95. Available at your local Radio Shack store.
- ***Power supply.*** Unregulated 12VDC supply, unregulated 1.75-amp continuous load, 5-amp surge. Catalog #22-127. $26.95. Radio Shack.
- ***Speaker grille cloth.*** Three styles available; we used Deluxe Black. Catalog #40-1935. $6.99. Radio Shack.
- ***Additional speaker.*** Minimus-3.5, 30-watt capacity, 3" speaker in high-density molded enclosure. Catalog #40-1996. $19.95. Radio Shack. ■

Project design: Dave Ashe
Photographs: William Hopkins
Illustrations: Bill Zaun

Distinguish Your Fine Workmanship With Your Own, Personal

BRANDING IRON

For Hard and Soft Wood

GUARANTEED

Available with your:

★ Initials ★ Name—w/wo Address
★ Logo ★ Choice of Wording

Changeable date available for most units
Call or write for free brochure

NOVA TOOL CO.
4533 Colfax Circle, Dept. BH
P.O. Box 29341, Lincoln, NE 68529
(402) 464-0511

SWINGING CRADLE

EASY TO MAKE WITH

Full-Size Plan

Authentic spindle design straight out of Colonial America. Plans show alternate construction with panel sides. Perfect for baby or use for magazines. Size: 20" x 39" x 30" high.

Order plan #166 ..... $9.00

CATALOG
180 diff., full-size prof. **furniture plans—$2.00**
(catalog free with order)

FURNITURE DESIGNS, Dept. BS-95
1425 Sherman Ave., Evanston, Ill. 60201

MAKE TOYS & WOOD PROJECTS

7 CAR TRAIN
$6—Plan only.
$27.50—Plan & turned parts (92 parts in all!).
Visa & M/C

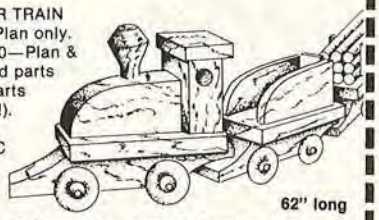

62" long

100's of plans, kits, colored & unfinished hardwood parts for toys, crafts & furniture; plus tools, wood, finishes & supplies. Bulk prices available. Color catalog subscription $1. (614)484-4363

Cherry Tree Toys, Box 369-9, Belmont, OH 43718

HORTON BRASSES

Nooks Hill Road, P.O. Box 120J
Cromwell, CT 06416 (203) 635-4400

HORTON BRASSES are authentic copies of 17th, 18th, 19th & early 20th century pulls

Mfrs. of Cabinet & Furniture Hardware for Homes & Antiques.
Send $2.00 for a Catalogue.

DOVETAILS MADE EASY!

Large and small through dovetail joints cut with Keller router templates. The superior professional system, for 2/4 to 5/4 stock, unlimited widths. Always quick, accurate and foolproof. Write or call for free brochure:

Keller Dovetail Templates
Box 800 G
Bolinas, CA
94924
(415)
868-0560

You can build this

Stacking Bookcase

in your shop.

You can build this beautiful bookcase with stacking shelves, each with its own glass door that lifts up and slides back.

No special hardware needed.

Step-by-step plans with detailed illustrations.

You have the tools. (table saw and router) All you need is the plan!!

Order Plan 004 $14.00

Send check or money order to:

About Time Plans, Dept. WD9-5
7707 Aurora N. / Seattle, WA 98103
Brochure $1.00 - refunded with order.

the American Woodworker

Receive A Free Copy Of The American Woodworker

1/3 Off Subscription Offer

If you enjoy woodworking, The American Woodworker is a must for you. It contains projects on three levels: beginning, intermediate and advanced. The plans alone are worth the subscription price. Our subscribers pay approximately 31 cents for each plan. Each project is well illustrated and photographed. Each issue is loaded with information showing in detail how to perform a specific woodworking operation, plus how to build time saving jigs and shop equipment that will save the woodworker hundreds of dollars. Informative articles explain how to compensate for the movement of wood, the basics of carcass construction, how to build a shop dust system for under $300.00, etc. These are a few examples of the types of articles you can look forward to. Listed below is a summary of what to expect from The American Woodworker.

- **Projects on 3 levels**
- **Large 9x12 size**
- **All different styles of furniture & projects**
- **A section on jigs**
- **Woodworking techniques**
- **A Question & Answer column**
- **In-depth instructional articles**
- **Supply sources, visits, reviews & much more**

The American Woodworker is published quarterly in March, June, September, and December so each issue is the type of publication that you will save for years to come. The subscription price is $10.00 per year, $18.00 for two years. Subscribe today for two years and we will send you our current issue free. That's a savings of almost 1/3 off the regular price. If you are not satisfied, cancel your subscription and keep the current issue free. Outside U.S., $14.00 per year, $22.00 for two years, U.S. funds. You can subscribe for the next year for $10.00, but your best buy is a two year subscription with a free issue. Imagine the next nine issues (including the Free Issue) for only $18.00. That's over 72 projects and enough technical articles to fill a good sized text book. Subscribe today. Your satisfaction is guaranteed 100% or your money will be refunded on unmailed copies.

THE AMERICAN WOODWORKER
P.O. Box 1408, Dept. W-3
Hendersonville, TN 37077-1408

THE BEST PROJECTS START WITH ARTISTRY IN VENEERS!

As a craftsman, you know the advantages of fine veneers and how they can be used to create original pieces. Artistry in Veneers provides you with a complete line of quality products at affordable prices... from materials to tools, kits, "how-to" books and more!

• Veneers • Tool Kits • Stains • Marquetry • Cane • Dollhouse Kits • Fancy Crotch, Swirls, Butts and Burls • Furniture and Toy Plans • Decorative Inlays and Borders • Wood Ship Models • Waterfowl Carving Kits • Finishing Materials and Accessories • Craft and Hobby Tools • Glues and Adhesives • Wood Products • SPECIAL ISSUE - Christmas Gift Items

SPECIAL DISCOUNTS FOR INSTITUTIONAL ORDERS.

SEND $1 FOR OUR WOODWORKER'S CATALOG
(Deductible from your first order.)

ARTISTRY IN VENEERS, INC.
450 Oak Tree Avenue, South Plainfield, NJ 07080
201-668-1430

Name _____
Address _____
City _____ State _____ Zip _____

Member of Woodworking Association of North America

THE Woodworkers ASSOCIATION

— INVITES —

Woodworkers interested in increasing their knowledge and enjoyment of their subject to send for details of this new association for the mutual benefit and enjoyment of all woodworking enthusiasts.

SEND FULL DETAILS of The Woodworkers Association:

NAME .....

STREET .....

CITY .....

STATE ..... ZIP .....

SEND TO: The Membership Secretary, Woodworkers Association, 166 High Street, Lewes, East Sussex, England.

A Complete New Combination Kit for Whittling and Carving By WARREN TOOL CO., INC.

Basic Woodcarving lesson book, prepared by the National Carvers Museum, teaches and illustrates proper carving techniques through clear instructions and simple projects.

#COMBI-TCE $79.95 Ppd.

OUR FINEST COMBINATION WHITTLERS AND CARVERS KIT

Contents: 1 Redwood Box, 1-#CWH-R Rosewood handle, 1 #L-Palm Walnut handle, (one each) #PTV-1, #LBG, #SBG, #PTV-2, #STC, #STG, #SFTG, #SKU, Gouges, 1-#LD2 (Large Blade), #6SBL (6-Small Blades), 1-Leather Strop Block, 1-Abrasive Paper Block, 1-Instruction Sheet. All blades and gouges sold in their own plastic storage tubes to avoid damage to these honed ready-to-use tools.

WARREN TOOL CO, INC.
Rt. 1, Box 14A-W, Rhinebeck, NY 12572
Catalog 60¢ FREE with order • (914) 876-7817

WOOD PARTS

WOODWORKS

Catalog $1.00 First Class
Free Third Class
WOODWORKS
4013-A Clay Ave. • Ft. Worth, TX 76117

Successful Woodworking Solutions

Solid Brass Furniture Hardware
Locks • Casters • Chair Cane
And Much Much More
Write For Your Catalog Today!

PAXTON HARDWARE LTD

7818 Bradshaw Road, Dept. BH1
Upper Falls, MD 21156
Free Brochure 64 page Catalog $2.50

CONCEALED HINGES FOR WOOD AND GLASS DOORS

- Largest Selection
- European (35mm)
- No-Bore For Glass
- Face Frame

Allen Specialty Hardware's emphasis is on MODERN hardware for craftsmen. European concealed hinges are our specialty, not a sideline. We offer the best selection, best quality, and most assistance in using them. Glass door hinges are available in either 2-pivot or no bore in nine styles. Make your kitchen cabinets more functional with wire shelves, baskets and slides. Build a computer cabinet using our TV extension slides. Our hardware for stereo cabinets includes everything from casters to lid hinges. No minimum order requirement and our prices are low.

STEREO AND KITCHEN CABINET HARDWARE
BRASS HARDWARE • SPECIALTY ITEMS
SLIDES • CATCHES • WOOD PULLS • ELEVATORS

MAIL ORDER ONLY—CATALOG $1.00
ALLEN SPECIALTY HARDWARE
DEPT. 6, P.O. BOX 10833, PITTSBURGH, PA 15236

SAFE • EASY • PRECISE PROFESSIONAL WOOD SCULPTURING

Compact. 10,000 vpm oscillating speed. Pressure activated. Operates on ordinary household current.
Send for free brochure. Dealers inquiries invited

$199.00

SUGINO USA, INC.
2246 N. Palmer Dr. • Schaumburg, IL. • 60195 (312) 397-9401

Wood Ship Models

Build a handsome model worthy of your time and care. Our scale model wooden ship kits contain only the finest materials for plank-on-frame and solid hull construction. Send $2 (refundable with purchase) for illustrated catalog of kits, fittings and supplies.

BLUEJACKET SHIPCRAFTERS
ESTABLISHED 1905
P.O. Box 533 - BH, Shelton, CT 06484

Create A Classic

Full size patterns for Packard Le Baron and 1929 Chevy Truck, plus a catalog of over 100 wooden toy patterns, wooden wheels, axle pegs, people, and other hardwood turnings.

Send check or money order for $10.00 for both patterns and catalog, or $1.50 for catalog.

TOY DESIGNS - Dept. BW985, Box 441
Newton, Iowa 50208

SHAKER FURNITURE

An exciting collection of Shaker furniture available as kits or finished to your specification. All exemplify the simplicity and versatile beauty of Shaker design. Shaker needlework kits, baskets, pegs, pegboard oval boxes, dolls and miniature furniture. Large selection of replacement chair tapes.

New 40 page color catalog and 12 tape samples $1.00

SHAKER WORKSHOPS
Box 1028-WM95, Concord, MA 01742
(617) 646-8985

NEW CIDER PRESSING MADE EASY!

Don't waste those apples! Making your own cider and other natural juices is so easy and enjoyable everyone at your place will want a turn at this sturdy SOLID MAPLE Cider & Wine Press. Make gallons of sparkling fresh cider with amazing ease. The taste is beyond compare! Make cider for freezing, make hard cider and wines. SEND TODAY for FREE facts about the Genuine Jaffrey Press – get ready for cider season now!

Fully Assembled or Kit Form!

Jaffrey Mfg. Co. P.O. Box 421W2 Jaffrey, NH 03452

BUILD THIS BLANKET CHEST

(17"Dx18"H x 36"W)

Order plans for this charming reproduction

This beauty will be admired by family and friends alike—especially when they see the great storage space that you've gained for your prized quilts and blankets.

The chest lid is hinged; and a pair of shallow drawers below add an authentic touch.

For complete building plans, including the know-how for duplicating the beautiful antiqued, painted finish, send $12. ppd. (Canadian residents please remit postal money order in US funds) to:

HAMMERMARK ASSOCIATES, Box 201-W9, Floral Park, NY 11002.

Product Sheet available for $1.00 (refundable). It's free with all Blanket Chest plans orders.

WOOD REPAIR

Durham's Rock Hard Water Putty makes lasting repairs in wood. Won't shrink or fall out. Sets quickly, holds tight and can easily be painted. Economical, easy to use. Available at lumber, paint and hardware stores.

DONALD DURHAM COMPANY
Box 804-W Des Moines, IA 50304

ANTIQUE & USED TOOLS

Quality, older hand tools for collectors and woodworkers. Illustrated lists published 5 times a year.

SUBSCRIPTION > **$4.00**
CURRENT LIST > **$1.00**

BOB KAUNE

specializing in

Stanley Tools

buy and sell

511 W. 11th • Port Angeles, WA 98362
(206) 452-2292

Print this article

The Old Hand Ways

THE COOPER'S TALE OF TOOLS AND TIME

"The lyf so short, the craft so long to lerne."

—Chaucer

What is the master craftsman's secret that makes us say, "It looks so easy!"? Sometimes the answer is amazingly obvious. Consider a master cooper, for example. George Pettengell of Colonial Williamsburg began his apprenticeship at age 14, learning to make oak barrels for a London brewery. Now, nearly three decades later, Pettengell can transform a stack of rough-split oak boards into a liquid-tight container worthy of 54 gallons of the finest brew—all in just the few daylight hours of a winter day.

Pettengell's tools, which served two generations of coopers before him, are odd, highly specialized implements, strange even to the experienced woodworker. Perhaps the tools are the answer to this craftsman's mastery of his medium. . . .

Is the axe or the drawknife the key?

Watch Pettengell at work. His axe is different from ours, or any we've seen. Its blade is long and thin. With it, Pettengell chops along the grain to *list* the split oak board to the double-tapered, bevel-edged shape of a barrel stave. His aim is uncannily accurate, yet he works with the speed of a hungry man at supper. Could it be the length and thinness, or the sharpness of his blade, that makes the cut so smooth? Or perhaps the wood is the answer: Even the pieces tossed for firewood seem flawless to us.

Stave after stave takes shape, each following the pattern that exists only in the mind of the cooper. Nothing guides the guillotine edge of his axe except his arm. Nothing defines the shape of the stave except his ingenuity.

Now he takes the bundle of listed staves to his *draw bench* or *shaving horse.* This foot-operated vise holds the stave at just the right height and inclination for shaping the outer and inner faces with a drawknife. On the convex face of the stave, Pettengell uses a large straight knife: A few long strokes shape the outside to a curve that gradually tightens at each end of the stave where the diameter of the barrel will be smallest.

For the inside of the stave, the master cooper uses a U-shaped hollowing knife. Its curve is roughly equivalent to the radius required for the interior of the stave. Only a curved knife could form the hollow, yet, just as with the other tools, nothing measures or controls the depth or length of the cut except the eyes and hands of the cooper.

Is his secret the jointer?

The staves—listed, rounded, and hollowed by the "freehand" axes and knives—now face a huge upside-down plane, the cooper's jointer, which stands with one end on the floor and the other on two legs (see photo). Sliding the staves down its slope, sending paper-thin curls to the floor of the shop, the cooper trues each mating surface. Anyone could make a perfectly straight edge with this giant. But where is the guide? Where is the fence to hold each stave at the proper angle to make it match its

Master cooper George Pettengell chops a barrel stave as his journeyman repairs a large "hogshead" barrel at Colonial Williamsburg.

By Roy Underhill

Master housewright at Colonial Williamsburg and host of the popular PBS series The Woodwright's Shop, *Underhill is also an author and lecturer.*

Continued

The INCA Woodworking Machinery Handbook

with useful tips and jigs for everyone!

Recommended for all power tool woodworkers. The joinery book for all present or prospective INCA owners. Now, at a Special Price! List - $12.95 **Special $9.95 ppd. *A $3.00 Savings!***

Many ideas for jigs, including Dovetails, Finger Joints, Pattern Work and many more are shown in over 300 illustrations. For your Table Saw, Bandsaw, Jointer, Planer & Shaper.

Drawer Dovetails Cut on Table Saw

Copying Curves Using Bandsaw

Return in 30 days for refund if not satisfied.

Send me the INCA Machinery Handbook at $9.95 each.
( ) Check Enclosed ( ) Charge to my: VISA, M/C, Amex
Card #: _____ Expires: _____
Signature: _____
Name: _____
Address: _____
City: _____ State: _____ Zip: _____

Send to: **The Garrett Wade Co., Inc., Dept. 510**
161 Avenue of the Americas, NY, NY 10013
Offer Expires 11/1/85

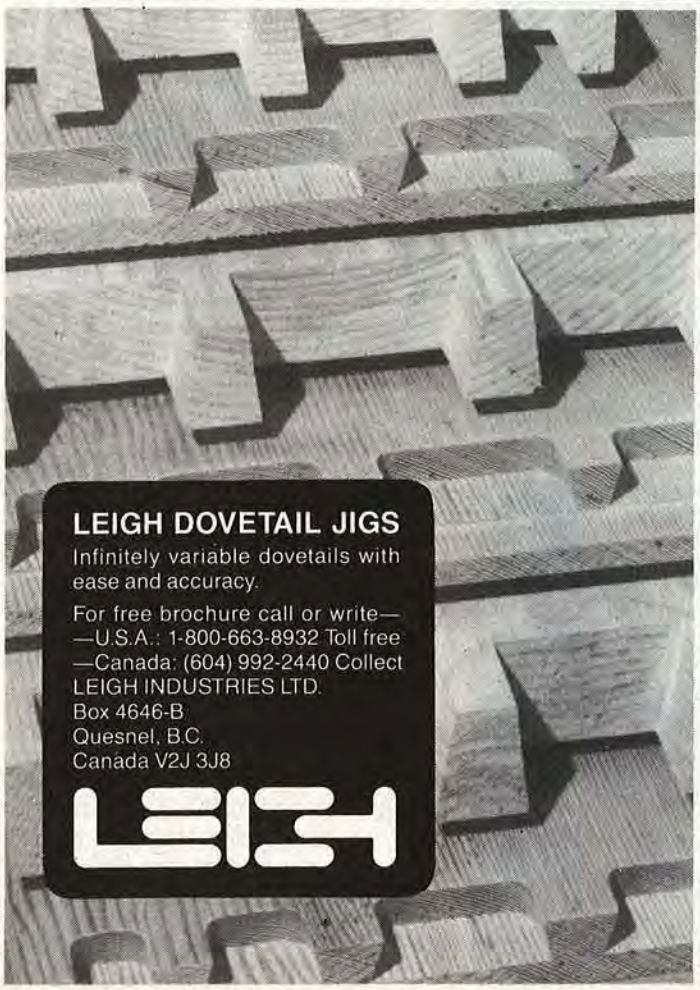

neighbor in a watertight seal? This is the critical surface. Any error here and the container simply won't hold water—yet no external guides exist.

Compared to shaping the staves, assembling or *raising* them into a barrel is as straightforward as arithmetic. Of course, it takes know-how and strength, but the basis is simple addition. Deftly, the cooper fills a hoop with staves until the circle is closed. One end of the barrel is now joined, each stave forced against the other like a keystone arch.

To draw the far end of the cask together, thus forming the bulging barrel shape, Pettengell first "softens" the staves by building a small fire of shavings within the splay-bottomed cylinder. When the oak is heated through, the cooper and his assistant drive a series of successively smaller wooden "trussing" hoops on the cylinder to shape the barrel.

Apprentice cooper Kerry Shakelford planes a stave on the jointer. A few of the tools unique to the cooper's trade are identified.

Now the cooper reaches for his most unusual and highly specialized tools to prepare the ends of the cask for the heads: the tightly curved, short-handled cooper's *adz*, the sideways curved *topping* or *sun plane;* and the *howell* and *croze* with their half-moon fences that reach inside to level and cut the grooves for the head.

The answer: Experience, of course

We don't even have to try the tools to guess the truth we've sought. The secret of the cooper's speed and grace—the reason it all "looks so easy"—is no secret at all. Axe or piano, block plane or jet plane, the tools are only as good as the person behind them. We've been privileged to watch the product of over 30 years of professional experience. When someone makes skilled work appear effortless, their secret is more costly than the finest tools—it's time.

Next issue: The story of the toymaker, the best-loved practitioner of The Old Hand Ways. ■

WOOD TOY

- ★ Patterns
- ★ Parts
- ★ Wheels
- ★ Many New Patterns to Choose from.
- ★ Free Shipping in U.S.A.

SEND $1.00 FOR NEW CATALOG AND RECEIVE COUPON FOR FREE WHEELS & AXLE PEGS.

toys and joys

Box 628W Lynden, Wash. 98264

WOODWORKERS

Save on Wood - Tools - Supplies!

OVER 4000 ITEMS

Send for New 1986 148 Page Money Saving CATALOG

OUR 56th Year

Finest Dimensioned HARDWOODS and Quality VENEERS

42 Varieties 1/64" to 4" Thickness

Fast service on choice kiln dried Wood and Veneers, Moldings, Trim, Hand and Power Tools, Lamp Parts, Upholstery Supplies, Clock Movements and Kits, Hard-to-Find Hardware, Finishing Materials, Books . . . over 4000 items in stock! Craftsman—Woodworker's best friend.

$3.00 Gift Certificate good on first order.

FREE with Catalog!

CRAFTSMAN WOOD SERVICE

Dept. K105 1735 W. Cortland Ct.. Addison, IL 60101

Please enclose $1.00 to help pay postage and handling

Have a question?

Call your library!

American Library Association

SCROLL SAW OWNERS -

Lettering Layout Guides!

- Use our specially designed guides to layout letters & numbers to be cut from wood or other materials.
- Made from a durable plastic material.
- Several styles & sizes.

Send $3.00 (Refundable with first order) for descriptive brochure & prices to:

SEYCO SALES 1238 Bardfield Box 472749 Garland, Texas 75047

Sleeveless **DRUM SANDER**

NO PRE-MADE SLEEVES TO BUY

ECONOMICAL — Simply cut sandpaper from standard size sheets
UNIQUE — Twist of key tightens sandpaper to drum.
SPONGE RUBBER backing insures long wear of sandpaper

1" x 3" long	$13.50
2" x 3" long	$15.50
2½" x 3" long	$16.00
3" x 3" long	$17.50

1" and 2½" Above $27.00
Above 4 Drums $55.00

⅜" x 3" long	$14.50
2½" x 4½" long	$21.00
3" x 4½" long	$22.50
2½" x 6" long	$25.50
3" x 6" long	$27.50

Add $2.50 Per Order For Shipping

AVAILABLE WITH:
½" Bore with ½" or ¼" shaft
½-20 RH Thread except ¾" x 3"
⅝" Bore except ¾" x 3" and 2" x 3"

USE ON:
Drill Press
Small Motor
Lathe, Combo-Tools,
Radial Saw, ¼" Drill

MONEY BACK GUARANTEE

Send Check or Money Order to:

SINGLEY SPECIALTY CO. INC.

P.O. BOX 5087B, GREENSBORO, N.C. 27403
CALL: (919) 852-8581

ROUTER BIT SALE

3 BIT SPECIAL: All Zac bits are carbide tipped & 1/4" shank. #6, 3/4" diam. × 1" cut edge, #5, 1/2" diam. × 1" cut edge, #25, 1/4" round over w/BB. & cat. **$25** ppd. To order bits CALL **800-441-0101** in NY 212-947-4496.

BIT 5

CATALOG: To order our fully illustrated 32 page catalog **mail in $2.50** in CK or MO for first class handling. NO phone orders for catalog alone.

ZAC PRODUCTS INC. 533 West 34 St. NYC, NY. 10001

For families who enjoy and take pride in their homes, there's no more appropriate gift than a subscription to WOOD magazine.

WHEEL-RIGHT Wheel Maker

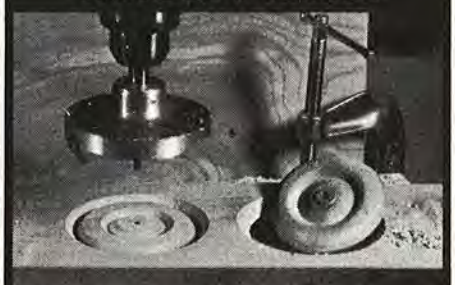

Never before possible a professional wheel maker that allows you to quickly mass produce detailed quality wooden wheels at a low low cost. Also turn out Rosettes and YoYo's.

$59.95 plus $2.00 shipping and handling

The Tool Company
1306-G South Commercial
P.O. Box 629, Dept. BHG-5
Harrisonville, MO 64701
(816) 884-2679
Mo. Res. add 5.625% Sales Tax

Wood Moisture Meter

- Avoid Moisture Problems
- Protect your Masterpiece

Pocket-Size **MINI LIGNO**

only **$110**

Incl. Case, Batteries, and Pins for 3/16" and 7/16" Measuring Depth. Size: 1"x 2¾"x 5½" Range: 6%, 7%, . . .20%

also from Lignomat:
MINI-LIGNO E
Range: 6%, 7%, . . . ,36%

Easy-to-use, sturdy instruments for the professional woodworker or serious hobbyist. Measures moisture in lumber, veneer, fiberboards. Ask for free catalog on the complete line of moisture meters and accessories. we can show you how to use a moisture meter efficiently.

Lignomat USA Ltd. Tel: 800-227-2105 503-257-8957
P.O. Box 30145 Dept. BH Portland, OR 97230

THE BEST TOOL YOU'LL EVER BUY

"WOODWORKING"

BY **IAN KIRBY**

- A TUTORIAL SERIES OF **TWELVE BOOKS & TWELVE AUDIO TAPES**
- WE INVITE YOU TO PREVIEW THE SERIES BY SENDING **$9.95 FOR THE FIRST BOOK AND AUDIO TAPE** NORMALLY PRICED AT $19.95 PER ISSUE
- SEND FOR INFORMATION AND SUBSCRIPTION DETAILS

☎ 1-800-LIGNUM-1

LIGNUM PRESS, Ltd
P.O. BOX 900217
ATLANTA, GEORGIA 30329

SIGNCARVING *IS PROFITABLE!*

And it's easy, if you use the Marlin Woodcarvers and accessories. You can carve signs quickly at home or at swap meets. The machines do the work, the operator has the fun and profits.

No Special Training Is Required!

SEND $1.00 FOR OUR BROCHURE AND PRICE LIST, AND BEGIN TO PLAN YOUR FULL OR PART-TIME BUSINESS.

Fine Carving Machines Since 1971

MARLIN INDUSTRIES
1911 OBISPO AVE., DEPT. D510
LONG BEACH, CA 90804
(213) 498-0767

CONOVER

WOODCRAFT SPECIALTIES, INC.

18125 Madison Road • Parkman • Ohio • 44080
216/548-3481

THE CONOVER 16" LATHE SET

Made in U.S.A.

With heavy cast iron construction, precision Timken roller bearings, a 16" swing, unlimited center distance and indexing to 12 positions; The Conover Lathe is suitable for heavy face plate turning (inboard and outboard), metal spinning, and spindle turning from chess pieces to porch posts.

The Conover Lathe Set is mounted on a wood bed which you build-to any length. Package includes headstock; tail stock; tool rest; hold down bolts, washers and wheels; motor mount; accessories and complete instructions for just $895.

OK Conover,

_____ Enclosed is $1 for your 16p catalogue detailing the Conover Lathe and your entire line of handmade tools.

_____ Enclosed is $2.50 for your catalogue, the lathe manual and a poster all sent 1st class.

Name _____

Address _____

City _____ State _____ Zip _____

Full Size Plans

Our Rocking Horse has a padded saddle & flowing mane. He's 36 x 25 and easily made from our full-size plan. **Plan-245..... $7.00**

Toddlers love riding Charlie Horse. He is 11 x 22 x 26 high & easily built of pine. **Plan-335 ..... $4.50**

Jib Crane swivels on ball bearings and has two working hand controls. Height 24" **Plan-319..... $4.00**

Our great collection of five toy vehicles is easily built with hand & power tools. Trailer is 18" long & 7" tall. **Plan-18004..... $8.50**

Add postage 50¢ per plan. NY Res. add tax.

Catalog $1.00—Free with plans. Phone (516) 462-6228
We accept Visa & MasterCard orders if over $15.00

ARMOR, Dept. L, Box 445, E. Northport, NY 11731

WOODWORKERS

FREUD 15 PIECE CARBIDE TIPPED ROUTER BIT SET IN WOODEN BOX

$300.00 Value

FREE CATALOG SUBSCRIPTION WITH PURCHASE.

CATALOG ONLY.
2 year subscription (8 issues) $4.00.
Free $5.00 gift certificate with catalog order.

R. A. NESS & CO.
THE WOODWORKERS EMPORIUM

8888 N. MILWAUKEE AVE.
NILES, IL 60648
(312) 824-0565

VISA MasterCard

NEW! High-Precision SCROLL SAW AT A SENSIBLE PRICE!

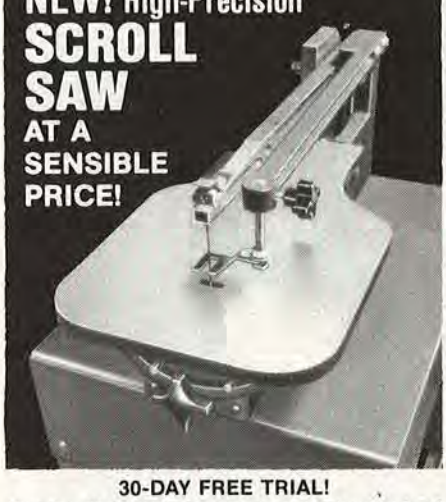

30-DAY FREE TRIAL!

Use this high-precision saw to make hundreds of profitable, unusual items . . . toys, name-bars, filigree work, clocks, holders . . . the list is nearly endless! Because the Model 1600 cuts so smoothly, sanding is virtually unnecessary!

The new Woodmaster Model 1600 gives you a big 16-in. throat capacity, 2-in. cutting depth, a generous, oversize worktable, ball-bearing drive . . . and much more! Made in U.S.A. **Easy Terms.**

Send today for free information kit!

Phone Toll Free 1-800-824-7888 Oper. 642

Woodmaster Tools, Dept. CW8
2908 Oak, Kansas City, MO 64108

Name _____

Address _____

City/State _____ Zip _____

Bargain Corner for
Clock Builders

Quartz Movement "Six Pack"

Reg. $5.95 ea.
SAVE $12.00!

LOWEST PRICES EVER! Special savings on our versatile "Ultra-Thin" (only 5/8" thick) movement. Includes minute and hour hands. **#90201** for dials to 1/4" thk. **#90202** for dials to 5/8" thk.
Order by the "Six Pack"—**ONLY $23.70**
(Plus $1.50 Shipping and Handling. IL Res. Add 6.25% Tax)

Dial Numeral Assortment
Enough to build 30 clocks—**ONLY $9.95**

SAVE 60%

A REAL PROFIT MAKER! Precision molded with brilliant gold finish. Permanent self-adhesive backs.
#43700 Numeral Set (Purch. Sep. $23) **ONLY $9.95**
(Plus $1.50 Shipping and Handling. IL Res. Add 6.25% Tax)

100-PAGE CATALOG!
Clock Kits, Movements and Dials
SEND $2.00 TODAY!
312-584-9600
VISA MasterCard

Craft Products Co.
Dept. BG5S, 2200 Dean Street, St. Charles, IL 60174

KILN DRY YOUR OWN LUMBER

nyle corporation

the nation's largest manufacturer of dehumidification dry kilns is now offering small 500 to 10,000 board feet drying systems.

★ Made completely in the USA
★ The leader of the industry
★ Offering excellent warrantees
★ Expert consultation and service

nyle DRY KILN SYSTEMS

P. O. Box 80064 A
Indianapolis, Indiana 46260
Telephone 317-843-1313

Print this article

Antique Furniture Reproduction: 15 Advanced Projects

By John A. Nelson, Van Nostrand Reinhold Company, 135 West 50th St., New York, NY 10020. ©1984.

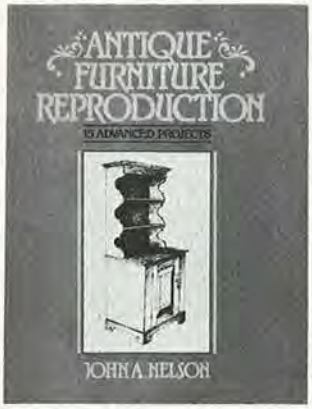

144 pages
$19.50
Clothbound

A COOKBOOK APPROACH TO REPRODUCING ANTIQUES

Looking for some intriguing woodworking projects? Then author John Nelson has something special for you—a project book filled with antique furniture reproductions. "All fifteen projects were copied directly from original antiques, so the woodworker will truly be taking a step into the past," Nelson explains in his introduction. "Each project is drawn to reproduce the original, even down to the somewhat 'odd' construction techniques that were sometimes used."

Nelson's short volume resembles a cookbook. Like recipes, instructions for making each project fill separate chapters that contain a brief introduction, materials list, cutting instructions, and directions for finishing. Well supplemented with scaled drawings, the project directions are easy to follow.

Among the antique projects, you'll find a long bench, a woodbox, a child's trunk, a harvest table, a one-drawer blanket chest, and a short-drop schoolhouse clock. In making his selections, Nelson chose projects for both the intermediate-level woodworker with limited equipment and the professional with a complete shop. He was also thoughtful in providing supplier sources for antique items such as nails, brass screws, hardware, and clock movements.

"As these projects are copies of old antiques, they will not look authentic if they have a shiny brand-new appearance. In most cases, they will look much more like real antiques if they are distressed slightly. There are many ways to do this—from hitting the final project with a chain to shooting it with a shotgun. Some fanatics on the 'state of the art' even bury their projects in the ground for six months. This is a little extreme."

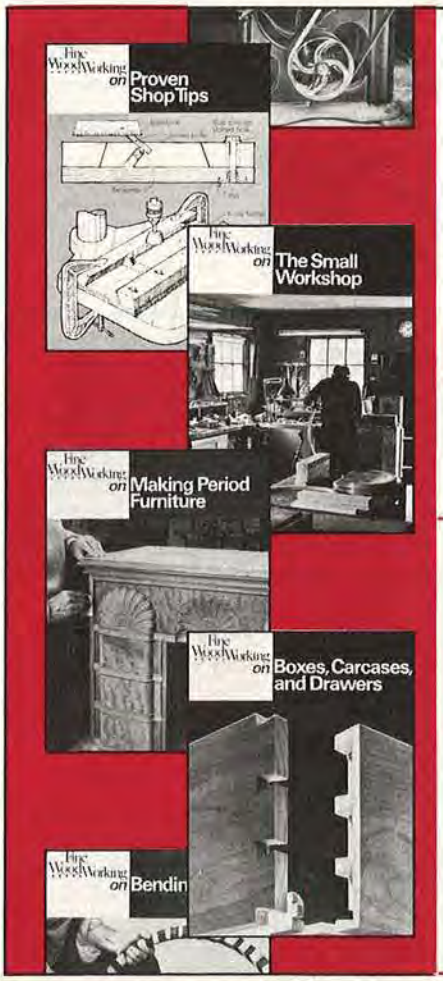
Fine WoodWorking on Proven Shop Tips
Fine WoodWorking on The Small Workshop
Fine WoodWorking on Making Period Furniture
Fine WoodWorking on Boxes, Carcases, and Drawers
Fine WoodWorking on Bendin

Introducing eight essential guides to better woodworking

from the publishers of *Fine Woodworking* magazine

Whether you're setting up your first shop or making period furniture, there's nothing like having expert information to help you expand your skills and improve your work. Our new *Fine Woodworking on...* series takes the best articles from *Fine Woodworking* magazine's first nine years and organizes them into information-packed volumes on joinery, furnituremaking, shop design, equipment, tools, tips and more. There are eight titles in all (they're listed below). Each one offers 35 or more carefully illustrated articles by some of the most talented amateur and professional woodworkers of the past decade.

To start building your library of *Fine Woodworking on...* books, use the form below or call **1-800-243-7252.** (In CT, 1-426-8171.) All books are in softcover, **$6.95 each postpaid.**

No.	Qty.	Books Titles	Amt.
31		On Joinery	
32		On Boxes, Carcases and Drawers	
33		On The Small Workshop	
34		On Planes and Chisels	
35		On Bending Wood	
36		On Making Period Furniture	
37		On Woodworking Machines	
38		On Proven Shop Tips	
		CT residents add 7 1/2% sales tax	
		TOTAL ORDER $ U.S. funds please.	

Name _____
Address _____
City _____
State _____ Zip _____

Make checks payable to: The Taunton Press

☐Payment enclosed ☐Visa
☐MasterCard ☐American Express

Card # _____
Exp. date _____
Signature _____

Send to: The Taunton Press, 63 South Main Street, Box 355PB11, Newtown, CT 06470

WOODWORKING WORLD

THE NEW YORK SHOW

WESTCHESTER COUNTY CENTER
WHITE PLAINS, NEW YORK

SEPTEMBER 27 - 2 pm - 9 pm
SEPTEMBER 28 - 10 am - 6 pm
SEPTEMBER 29 - 10 am - 5pm

WOODWORKING ASSOCIATION OF NORTH AMERICA
WANA

THE CHICAGO SHOW

O'HARE EXPO CENTER
EXHIBIT HALL E
ROSEMONT, ILLINOIS

OCTOBER 25 - 5 pm - 9 pm
OCTOBER 26 - 10 am - 6 pm
OCTOBER 27 - 10 am - 5 pm

EXHIBITS, DEMONSTRATIONS & SALES OF EVERYTHING FOR THE WOODWORKER

FREE SEMINARS WITH ADMISSION TO THE SHOW

ADMISSION $5 / $1 OFF WITH THIS AD

Sponsored by

WOODWORKING ASSOCIATION OF NORTH AMERICA

For more information and seminar schedule, call or write: W.A.N.A.
POST OFFICE BOX 706, PLYMOUTH, NH 03264 - (603) 536-3876

BOOKS WORTH READING

Working in Wood: The Illustrated Manual of Tools, Methods, Materials and Classic Construction

By Ernest Scott. G. P. Putnam's Sons, 200 Madison Ave., New York, NY 10016. ©1980.

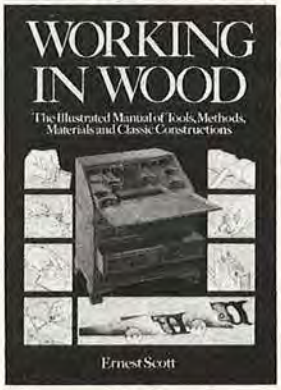

272 pages
$25
Clothbound

A TRANSATLANTIC OVERVIEW OF WOODWORKING

Right from the first paragraph, you'll appreciate British author Ernest Scott's thoughts about the rewards of woodworking: ". . . as these traditional [woodworking] skills are required less and less in the pursuit of a living, they are coveted more and more for the sheer pleasure inherent in their mastery."

Perhaps the only way to match the sheer pleasure of woodworking is to curl up beside a crackling fire and read "the secrets of these skills" as Scott reveals them. Balancing narrative with superb and abundant color photographs, color illustrations, and hundreds of drawings, Scott takes you on a wondrous journey through the world of woodworking. He describes the evolution of techniques, traditional furniture design and problems, hand and power tools, joining, bending, laminating, wood turning, carving, veneering, finishing, and restoring. Throughout this book, you'll come across terms that reflect Scott's English woodworking heritage, yet they present no barrier.

In the materials section, Scott presents his fascinating story of wood—to him nature's most sympathetic material. You'll learn how trees grow, how wood is cured, and how to choose wood for your projects.

This isn't a "coffee table book," but one to use and enjoy. It won't spend much time on your bookshelf.

"The earliest chests were crudely constructed from sections of solid timber that were hollowed out and bound with iron straps to minimize the effects of shrinkage. These dug-out chests were made from the trunks of fallen trees—the contemporary usage of the word 'trunk' being a reminder of their origin."

Let's close the book on forest fires.

Ad Council *A Public Service of This Magazine & The Advertising Council*

Joint-Matic 4200

The Joint-Matic will help you produce woodworking pieces of elegance, precision and beauty more quickly and expertly than you ever thought possible. Now, in minutes make... Mortise, Tenon, Sliding and Through Dovetail, Box Finger Joint and much much more.

For Your Brochure Please Send $2.00 to:

Strong TOOL DESIGN 20425 Beatrice Dept.W Livonia, MI. 48152

Joint-Matic Machine Is Protected By U.S. Patent 4,163,465

New Low Prices!

Quartz Clock Movements

M88 Thinline

Made in Japan by the world's largest producer of quartz timepieces.

2-3/16" square x 5/8" thick. Step sweep hand. Uses AA cell.

Fast Delivery!

1-$6.00 25-$3.60 100-$2.95
5-$4.50 50-$3.35 250-$2.60
10-$4.25 FREE HANDS

Money Back Guarantee!

PRICES INCLUDE HOUR AND MINUTE HAND. ADD 25¢ FOR SECOND HANDS. Add $2.00 per order for postage & handling.

New Catalog
55 pages of clock movements, dials, accessories, hands, tools, and more!
Catalog #785 $1.00
(Free with order)

Cas-Ker Co.
BOX 2347-R CINTI, OH 45201
PHONE (513) 241-7073

Better By Design®
POWERMATIC III

MODEL 50
6" JOINTER

3/4 HP, 115 V
1 phase motor,
Manual Switch

List ~~$1316~~ SALE $932

MODEL 30-B
BELT AND DISC SANDER

12" DISC, 6" X 48" Belt,
1 1/2 HP, 115 V
1 phase motor,
Manual Switch,
complete with stand

List ~~$1789~~ SALE $1275

MODEL 1150-A
15" DRILL PRESS

Variable Speed Drive
3/4 HP, 115 V
1 phase motor,
Manual Switch

List ~~$1319~~ SALE $997

supplies limited–
applicable sales tax extra F.O.B. factory

BRADY SUPPLY CORP.
649 MADISON AVENUE
P.O. BOX 326
ELMIRA, NY 14902-0326
607-733-6591

ANY WAY YOU CUT IT...

NOW YOU CAN DRY IT.

EBAC LUMBER DRYERS

Systems starting at 100 BF

Write or phone for FREE INFORMATION

1-800-433-9011
or
317-897-2100

Ebac of America
8726 East 33rd Street
Indianapolis, Indiana 46226

CALL US FOR QUOTATIONS ON MACHINES & ACCESSORIES BEFORE YOU BUY!

POWERMATIC Model No. 26 Shaper—$1,669.00 FOB McMinnville, TN with either #1260050 solid spindle or #1260010 interchangeable ½" or ¾" spindles, complete with motor and control.
Miss. residents add 6% tax.

Special net prices
Sale ends December 31, 1985
FREUD carbide raised panel cutters.

#EC-202	#EC-209
#EC-210	#EC-211
#EC-212	#EC-213

$79.00 each *Prepaid in U.S.A.*

Call us for your special prices on other Freud blades and cutters.
Call toll free 800-821-2750.
In Miss. call 800-321-8107.
Ask for Max, Bobby or Van.

Addkison HARDWARE CO. INC.

126 E. Amite St., P.O. Box 102
Jackson, MS 39205

WOOD WORLD

IN ILLINOIS
1719 Chestnut Ave.
Glenview, IL 60025
(312) 729-9663

3218 Wireton Rd.
Blue Island, IL
(312) 389-7667

IN ARIZONA
1705 W. University
Tempe, AZ 85281
(602) 966-2444

DOMESTIC & EXOTIC HARDWOODS
HARDWOOD PLYWOOD—VENEERS

You Select Your Own Lumber ▪ Custom Cutting & Milling

WOODWORKING & CARVING CLASSES

WOODWORKERS
AMATEUR & PROFESSIONAL

Hardwood Mouldings
▪
INCA Power Tools
▪
Books & Magazines
▪
Hand Tools
▪
Watco Stains & Finishes
▪
Freud
▪
Router Bits & Sawblades

22½° OCTAGON GAUGE

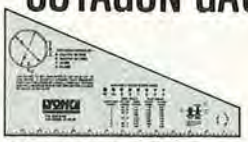

TO SET MITER TO SAW BLADE FOR 22½° CUT. HARDENED ALUMINUM GAUGE HAS OCTAGON FORMULAS AND 14" RULER SCREENED ON. ALSO SCREW CHECKER AND INFORMATION.

$7.95 Plus $2.00 Handling and Shipping

California residents add 6% sales tax. Send check or money order to:

LYON ELECTRIC COMPANY, INC.
P.O. BOX 81303 SAN DIEGO, CA 92138

New

E-Z PNEUMATIC DRUM SANDER
...For woodworkers & carvers. Inflates to desired firmness, contours to the shape of your work. Eliminates hand-sanding. **Foredom tools-Detail Master burning unit-Abrasives-Books and more, at great prices!**

Catalog $2.00 (refundable).
North West Carving Supplies
P.O. Box 5211
Bozeman, MT 59715

THE DOOR SHOP™

The original Ogee **DOOR SHOP**™ as featured in WOOD MAGAZINE (MAY/JUNE 85) is complete with style & rail, slot & panel raising bits for the 1/4" chuck router. Bits are carbide tipped & BB. & will make 3/4"–2-1/4" thick raised panel doors, **$89.50** ppd.

TO ORDER CALL **800-441-0101**

IN NY **212-947-4496.**

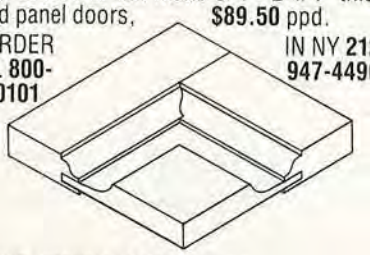

ZAC PRODUCTS INC. 533 West 34 St. NYC, NY. 10001

National Carvers Museum

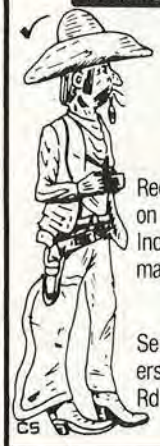

LEARN WOODCARVING AT HOME

Receive sample instructional pack on whittling and woodcarving. Includes copy of *Mallet* monthly magazine.

Send $1.00 to The National Carvers Museum, 14960 Woodcarver Rd., Monument, CO 80132.

WOODWORKING MACHINES
5 in 1 Combination

1 • 34" LATHE
2 • 10" TABLE SAW
3 • 11¾" DISC SANDER
4 • 16½" VERTICAL DRILL PRESS
5 • HORIZONTAL DRILL PRESS

VERY IMPORTANT

The only machine built with
a. All CAST IRON TABLES
b. HEAVY-DUTY DESIGN
c. 1½HP MOTOR DEVELOPS 3HP
d. BUILT AS AN INDUSTRIAL MACHINE
e. ONLY MACHINE WITH 5-YEAR GUARANTEE

ONE PLACE FOR ALL YOUR NEEDS...

☐ VISA ☐ MASTERCARD ☐ FINANCE AVAILABLE

PLANT:
MASTER WOODCRAFT CO.
800 SPRUCE LAKE DRIVE • P.O. BOX 669
HARBOR CITY, CA 90710
TOLL FREE 1-800 421-2467
IN CALIFORNIA CALL COLLECT (213) 549-0761
(A Republic-Lagun Group) • Dealership Available

ROUTER HANDBOOK

If you own a router—or will ever buy one—this is a must!

$9.95

Finally! The definitive guide to a revolutionary woodworking tool that belongs in every workshop. Patrick Spielman explains every step of its operation for beginners and experts alike, and includes an incredible variety of routers, bits and accessories. You'll learn how to make the router simplify and facilitate the creation of every project without any additional expensive equipment, what standard and unusual techniques you can do, how to build woodwork aids and devices, plus 600 photos and illustrations to make the entire process easy to follow.

You'll find it an incredible source of information! Discover:

- Scores of available routers, with an analysis of their advantages and disadvantages
- Safety and sharpening procedures
- Techniques for making and fitting carving designs on wood surfaces, and creating panels, cabinet doors, and wood signs
- Routing techniques for dovetails, plastic laminates, joints, and surfaces, as well as the use of templates and patterns
- Money-saving ways to make jigs and fixtures that will help in unusual routing techniques and production carving machines
- Overarm and pin-routing techniques
- And much, much more!

All this, plus patterns and instructions for dozens of projects that incorporate all this know-how.

Nothing is left out—no bit, jig or fixture escapes his notice; no shortcuts, no effects are ignored. From basic operating procedures for every woodworker to specialized skills every craftsman wants to know, this all-inclusive handbook will become the indispensable book on the essential tool for the home workshop.

Act now! Send your check for $9.95, an incredible value, and we'll even ship postage free.

STERLING PUBLISHING CO., INC., Dept. WD-1, Two Park Avenue, New York, N.Y. 10016

If you would like more information about advertising in *Wood*, contact:

Jerry Kaplan
750 Third Avenue
New York, NY 10017

212-551-7099

CLOCK COMPONENTS

QUARTZ CLOCK MOVEMENTS

WE FEATURE BATTERY, PENDULUM, CHIME QUARTZ MOVEMENTS OF ALL TYPES. URGOS, HERMLE, GRANDMOTHER, GRANDFATHER CABLE DRIVE AND CHAIN DRIVE, KEY WIND MOVEMENTS OF ALL TYPES. 400 DAY CLOCKS, MUSIC BOX MOVEMENTS, FLAT AND BEZEL TYPE DIALS—PLUS A VAST ASSORTMENT OF WEATHER INSTRUMENTS. HUNDREDS OF CLOCK ITEMS. VERY COMPETITIVE PRICES. WRITE OR CALL FOR FREE 75 PAGE CATALOG. $2 FOR AIR MAIL.

THE QUARTZ FITUP THE MINI QUARTZ

Send To:
NEWPORT ENTERPRISES INC.
2313 W. Burbank Blvd.,
Burbank, CA 91506
(213) 845-0555

How to Carve Wildfowl

By Roger Schroeder, Stackpole Books, Cameron and Kelker Sts., P.O. Box 1831, Harrisburg, PA 17105. ©1984.

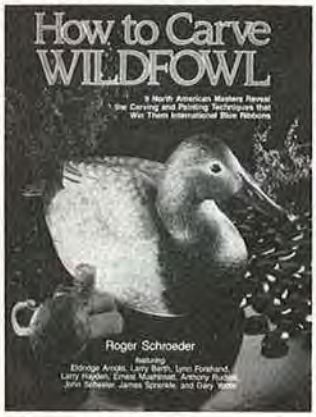

255 pages
$39.95
Clothbound

THE SECRETS OF MASTER WILDFOWL CARVERS

Carving and painting decorative wildfowl pieces rates as a *big* business these days, and the competition for awards is stiff. Nevertheless, author Roger Schroeder has pried loose the blue-ribbon techniques of nine master wildfowl artists in this descriptive (and expensive) book. In their own words, the experts relate their differing carving and finishing methods. More than 800 photos, including 34 color plates, show the subtleties of how the masters produce international award-winning works of art.

You'll soon realize why these artists have earned top recognition as the author shares their perception of birds and how to re-create them—as well as their amazing devotion to meticulous detail. Practical information about shaping with the Foredom tool, burning for color, adding wings and tails, and techniques to achieve the living color of wildfowl lift this book from the display category to workshop usefulness. While the book *is* technical, the words flow smoothly.

Schroeder reports that as he gathered his information, he learned things about wood that applied to his own cabinetmaking. He adds that, "The techniques on painting alone make it a valuable resource for any artist concerned with color." As an authoritative source book, *How to Carve Waterfowl* is worth a look.

"In order for a carver to be successful, he's got to have the technical aspects, because if you fail in any aspect of the piece, the whole carving will suffer. And even that may not be enough. You need some spark, some life in the carving that goes beyond just having made it the right colors and the right shape."
—Larry Barth, artist, quoted by Roger Schroeder

Make it with love and Elmer's.

BORDEN

Use Elmer's® Carpenter's Wood Glue or Wood Filler and get easy to follow plans for any one of these original heirloom designs for just $3.00.

Child favorite that will become a family heirloom.

Elmer's Carpenter's Wood Glue grabs instantly, realigns easily, then forms a bond stronger than the wood itself. Elmer's Wood Filler spreads easily; then you can sand it, varnish it and stain it. Both Elmer's products help give you professional results every time. Buy one or both, then send for the plans at just $3.00 each. Your child will love the results!

Send check or money order and proof of purchase—UPC label or code number—to:

Elmer's Plans Offer
P.O. Box 2383
Van Nuys, CA 91409-2383

Specify plans:
Rocking Horse,
Doll House,
Rocking Chair,
Set of Toys.

Functional plans for airplane, truck and steamboat. Each a classic design.

Favorite for young or old, Victorian style measures 36" high.

A child-size collector's item.

© Borden Inc 1985

Build it Yourself and SAVE!

Project Plans for All Around the House
Project Plans for Outdoor Living
Project Plans To Build for Children
Better Homes

From the pages of Better Homes and Gardens® Magazine... three new catalogs of plans for do-it-yourselfers

Together these three books contain over 400 projects of all types, ranging from outdoor playhouses to children's toys to unique home sewing centers.

Each 5¼" x 9" quality paperback book contains 128 pages and almost 150 photographs and illustrations, most of which appear in **full color**. All photography and editorial material is taken from the pages of Better Homes and Gardens® Magazine.

Directions to some of the projects are contained in the books, and plans for the more complicated ones can be ordered by mail.

SAVE when you purchase our three book pack!

PRICES:

No. 50523 Project Plans For All Around The House **$3.95** (plus $1.00 for shipping and handling)

No. 50524 Project Plans For Outdoor Living **$3.95** (plus $1.00 for shipping and handling)

No. 50525 Project Plans To Build For Children **$3.95** (plus $1.00 for shipping and handling)

No. 50526 All Three Project Plan Catalogs **$9.95** (plus $2.00 for shipping and handling)

*TAX NOTE: We are required to collect and pay STATE taxes in Arizona, Connecticut, Illinois, Iowa, Kansas, Michigan, Minnesota, Missouri, New Mexico, Pennsylvania, and Wisconsin. We are required to pay STATE/LOCAL taxes in California, Georgia, Nebraska, New York, Tennessee, Texas, Virginia, and Washington.

HOW TO ORDER:

1. Specify item(s) desired. Include shipping, handling, and sales tax*.
2. Send name, address, order, and check or money order to:

Better Homes and Gardens SHOPPING SERVICE

Locust at 17th
Dept. 3MB, Box 374
Des Moines, Iowa 50336

MONEY BACK GUARANTEE
If you are not happy with your purchase, simply return it for a 100% MONEY BACK REFUND — including shipping and handling charges.

FREE 100's OF PARTS!
WORKSHOP ORGANIZERS

FREE **$18.95** hardwood parts **ORGANIZER** with purchase of our woodworking or toy-making parts selections. Parts are priced below our catalog prices. Send $47.95 ppd. for either woodworking or toymaking parts (please specify) and receive $18.95 organizer FREE! Visa & M/C. Color catalog $1. (614) 484-4363

Cherry Tree Toys, Box 369-409, Belmont, OH 43718

EDLCO

Appalachian Hardwood Specialists
Now Serving Craftsmen
Select from over 21 species
Imported And Domestic Hardwoods
Softwoods
Veneers Shorts Turnings
Kiln Dried Delivered Prices
New Catalogue $2.00
Write today EDLCO
Box 5373 W
Asheville, N.C. 28813
Phone (704) 255-8765
Stay In The Woods With Us

EDUCATIONAL LUMBER CO., INC.

NEW!
Power Feed
DRUM SANDER!

At last!
A complete, power-feed drum sander priced for the home shop!

This heavy-duty, 12-inch sander comes ready to use including motor & stand . . . nothing extra to build or buy!

A Finish Sander . . . A Thickness Sander

You can use this high-tolerance machine for light dimensioning as well as the finest finish work. Because stock is power-fed at a uniform rate, you'll achieve results impossible to duplicate with hand methods or hand-held sanders. Dimensions remain exact . . . no more low spots, waves or cross grain marks!

Improves Results!

Use the Woodmaster to dimension and finish-sand cabinet pieces, resawn stock, paneling, grandfather clocks, toys, tabletops, knees, burls, crotches, and much, much more! You'll soon find it's one of the most valuable tools in your shop!

30-Day FREE Trial!

Send for Complete Facts! See how you can use the Woodmaster Drum Sander in your own shop for 30 days completely without risk! Easy terms.

Call Toll-Free 1(800) 824-7888 Oper. 642

Woodmaster Tools, 2908 Oak, Dept. RW8
Kansas City, Missouri 64108

☐**YES!** Please rush my FREE Information Kit and details on your 30-Day Free Trial Guarantee.

Name _____
Address _____
City _____ State _____ Zip _____

A Family Tradition Since 1916

Kuempel Chime

BUILD THE FINEST
We Know You Can Do It!

Easy to assemble quality Red-i-Kut Clock kits. A variety of designs hand made by our Grandfathers in solid ¾" cherry, oak or walnut with beveled glass.

Tubular Bell or Rod movements. Handcrafted pendulums. Original bronze etched dials and hand painted moonwheels.

Or start from scratch. American Classic Plan - $3.00

Write for Free Literature or Call

1-800-328-6445

Between 8 a.m. & 4 p.m.

Kuempel Chime
Dept. 007, 21195 Minnetonka Blvd.
Excelsior, MN 55331

LOOKING AT YESTERYEAR

This 1" scale miniature wagon is an ideal project for the craftsman with an eye for beauty and charm of Early America. You can easily build this miniature using our full size cutting patterns and details.
$6 + $1 handling. Catalog: $1.
Criss-Cross, Box 324BJ, Wayne, NJ 07470

NEW! AFFORDABLE 24" KIT SCROLL SAW

FINALLY — At last a 24" throat precision scroll saw that is affordable to any woodworker — saw complete or kit form.

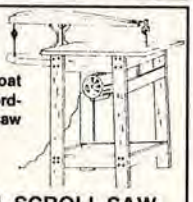

PEDAL SCROLL SAW

Beautiful all cast-aluminum reproduction of the time proven Velocipede No. 2 Scroll Saw. Great attraction when working craft shows. Total speed control. 24" throat can cut material modern scroll saws can't.
Write or call—

Mo. res. add 5.625% sales tax

THE TOOL COMPANY
1306 S. Commercial
P.O. Box 629, Dept. BHG-5
Harrisonville, MO 64701
(816) 884-2679

LETTERWOOD

Beauty in the eye of the beholder

To some, letterwood suggests hieroglyphics; to others, leopard spots, snake skin, or a tortoiseshell.

The intricately patterned figure of *Piratinera guianensis*, commonly called letterwood, resembles the characters in Egyptian hieroglyphics. Depending on how you look at it, the pattern also can appear to be the spots on a leopard, the markings on a snake skin, or the mottled beauty of a tortoiseshell. That's why letterwood goes by other names as well—leopardwood, snakewood, and tortoiseshell wood. No matter what you choose to call this exquisite wood, it remains one of the most desirable, scarce, and costly in the world.

Native to northern South America, particularly Suriname (formerly Dutch Guiana), letterwood has intrigued the English for centuries. For gentlemen, letterwood yielded aristocratic walking canes and umbrella handles. Top-flight archers in the Royal Army laminated it to the backs of their bows for added stiffness and dash. Fancy jewelry boxes and cabinets trimmed with letterwood veneer fetched the highest prices from nobility. And musicians of the 16th and 17th centuries thought it ideal for their classical viol bows. Today, letterwood remains popular for knife handles, decorative inlay boxes, and other small items.

Letterwood harvesting has changed little over the centuries. Workers fell the tree and cut away the huge mass of worthless sapwood. The remaining heartwood core—usually no more than 4″ in diameter out of a total girth of 15″—is seasoned, then shipped in "sticks" about 7′ long. At the end of its journey, letterwood is sold by weight. Since letterwood, at 75–84 lbs. per cubic foot, is one of the densest woods in the world, the cost approaches $80 a board foot at the going rate of $12.95 per pound! ■

Photograph: Bob Calmer
Illustration: Jim Stevenson

MAKITA • PORTER CABLE • ROCKWELL • BOSCH • LION
HILLER HARDWARE CO.
ASSURES YOUR SATISFACTION ON ANY ITEM PURCHASED FROM US! WE CAN SHIP YOUR BANK CARD ORDER TODAY
50% OFF freud INDUSTRIAL
10" CARBIDE TIPPED BLADES

Blade	Description	Teeth	List Price	Hiller's Price
LU72	General Purpose	40	68.58	34.29
LU73	Cut-Off	60	79.65	39.83
LU81	General Purpose	40	69.30	34.65
LU82	General Purpose	60	86.50	43.25
LU84	Combination	40	70.99	35.50
LU84	Combination	50	74.51	37.26
LU85	Combination	80	110.88	55.44
LM72	RIP	24	64.85	32.43

5/8" BORE STANDARD, ADD $8.00 FOR ANY OTHER BORE

• WE HONOR ALL FREUD NATIONALLY ADVERTISED SPECIALS
• CALL OR WRITE TODAY FOR CURRENT PRICES ON OTHER TOOLS/ACCESSORIES
• PRICES QUOTED, DELIVERED PREPAID
• VISA, MASTERCARD ACCEPTED

HILLER HARDWARE CO.
1411 ASSEMBLY STREET, P.O. BOX 1762
COLUMBIA, S.C 29202-1762
803-779-3131 EXT. 12
YOUR WOODWORKING SPECIALIST IN THE SOUTHEAST

MARPLES • RECORD • WATCO • NU-LIFE • DOWEL-IT-CLESCO • GILLESPIE • FREUD
BLACK & DECKER • MILWAUKEE • FORSTNER • JORGENSEN • 3M • W.L. FULLER
HEGNER • STANLEY • GREENLEE • HENCKELS • MERIT

DESIGN YOUR OWN HOME
The easy, professional way!

the Fine Tool Shops
The Fine Tool Shops, Inc.,
Dept. WM95
20 Backus Ave., Box 1262,
Danbury, CT 06810

SEND ME ____(qty.) HOME PLANNER(s) #601-0010 so I can save time and money, avoid costly mistakes the next time I redecorate, remodel or build.

I enclose ___check ___money order for $24.95 plus $2.00 shipping/handling (total $26.95) for each HOME PLANNER.
___Charge my
___VISA ___MasterCard ___AmEx
Account # _____
Name _____
Address _____
City _____ State ____ Zip ____

Lay out a room, an addition, a whole house!
"Move" furniture, windows, walls, fixtures
Plan work space, traffic flow
Show your builder exactly what you want—save time, save money, prevent costly errors.
20" x 26" planning grid, scaled 1/4" = 1'
Over 400 lift-off pieces – walls, windows, fixtures, furniture, appliances
16-page home planning booklet included.

ORDER TOLL FREE 1-800-243-1037 In Conn., 797-0772

IACCARINO & SON

Factory Lumber Outlet

"Woods of the World"

200 SHREWSBURY STREET
BOYLSTON, MASSACHUSETTS 01505

We stock over 100 species of domestic & exotic woods including:

- All Domestic Woods
- Apple
- Balsa
- Benge
- Brazilian Rosewood
- Bubinga
- Ceylon and African Ebony
- Ceylon Satinwood
- Cocobolo
- Curly and Birds Eye Maple
- East Indian Rosewood
- English Brown Oak
- European Pearwood
- Goncalo Alves
- Holly
- Honduras Mahogany
- Honduras Rosewood
- Iroko
- Jelutong
- Macassar Ebony
- Mahogany
- Mexican Rosewood (Bocote)
- Padouk
- Philippine Mahogany
- Purple Heart
- Shedua
- Teak

During more than a half century as millwrights and cabinetmakers, we have become experts in acquiring and working with the finest hardwoods and softwoods. Our knowledge of the best domestic and worldwide sources of rare woods is without peer. The large volumes in which we buy fine woods affords us the best possible prices which, in turn, we pass along to you. Iaccarino and Son is also your source for the finest lines of high quality woodworking hand tools.

Call For Free Catalog

(617) 869-2791

TOLL FREE:

In Mass. 1-800-521-0039

New England 1-800-222-1420

how to judge the FACE SIDE of hardwood plywood

Side A

Which is the best face? The photos show both sides of a premium-grade oak veneer panel. Side A, above, has fewer splices and a consistent grain pattern. It's our choice.

Naturally, you want the best face to show when building furniture and cabinetry from hardwood veneer plywood. Often, though, the "two-faced" nature of premium grades makes that choice a difficult one.

Side B

Only the premium grades of hardwood veneer plywood—AA, A, and A1—pose a problem in selecting the right face for a project. These grades have veneers on both sides that may at first glance look nearly identical (especially AA). However, subtle differences do exist, and choosing the right face can make the difference between a good end product and a superior one. Here's what you need to know.

The three characteristics of face

There's a precept among expert cabinetmakers that says a project must be striking from afar and look even better up close. That's why they select the "showing" side of panels according to *color* first, *grain* second, and *splices* last.

Color is the overall tone of the wood. In most cases you'll want a uniform veneer coloring all across the stock, or across each of several panels. In some species, where industry grading standards accept sapwood as well as heartwood for the veneer, there will be a color variation. Here, you'll want to make sure that the color variation occurs regularly enough to form a recognizable pattern.

Grain, your second consideration, should also be consistent across the face of the panel you select. If you're working with

straight-grained, rift-cut white oak, for instance, you wouldn't want a portion of it to show any figure. The selection of matching *flitches*, or strips of veneer that make up the panel face, was made by the manufacturer, but it's up to you to choose the most pleasing effect. Once you have chosen the grain you want displayed in your project, stick with it wherever possible.

Splices, the faintly visible joints between flitches, should be your last consideration after you have settled on the side with the best color and grain. Only when these butted-up flitch edges interfere with appearance will this choice change priority. When both sides look to be the same, the best face will usually have the fewest number of splices. To find them, scan the panel from left to right across the grain.

Imperfections to eliminate

Despite quality control standards practiced in the hardwood plywood industry, slight imperfections may slip by the inspectors. These flaws may become the deciding factor in selecting which face to use in your project.

The rare, but not unknown, glue stain from the veneering process should eliminate a side, for instance. Or a depression in a core ply that "telegraphs" through as surface roughness (you can find these depressions by running the palm of your hand slowly over the face veneer). Neither of these imperfections can be sanded out, and they will show up noticeably in the finished product.

What if you can't make up your mind, even after considering variations in color, grain, splices, and imperfections? Try this test: Wipe a light coat of tung or Danish oil on both sides of the panel. The oil tends to enhance and magnify everything, including imperfections and should make the choice all the more obvious. ■

Photographs: Scott Little

$12 AN HOUR
YOU CAN EARN UP TO THAT AMOUNT

Start Your Own Business! Earn Extra Income Right At Home.

Sharpen Saws...
...ALL Garden and shop tools for home and industry

Get In On The Profits!

Yes there's plenty of business waiting for the man who can professionally sharpen saws and all types of edge-cutting tools. SHARP-All does them all, and at big profit for you. No inventory is involved . . . no selling. You earn a year-round Cash income and make 90¢ profit out of every dollar you take in. Work sparetime hours or fulltime right at home, and no experience is needed.

Send TODAY for details of our 30-Day FREE Trial Offer!

With SHARP-ALL It's Easy To Get Started!

You don't need to invest thousands of dollars to get started in business for yourself. Low cost Sharp-All and our 50 years of experience in helping sincere men to earn extra income, plus the desire to get ahead is all you need. Complete Operators Manual gives clear, step-by-step instructions, shows exactly how to sharpen each tool, where to get the "tricks of the trade". And Sharp-All does the kind of precision job that brings customers back time after time.

There are NO franchise fees of any kind. With Sharp-All YOU are the boss . . . YOU set the hours you want to work . . . you put the profits in YOUR pocket.

FREE BOOKLET! Send for your copy today. No obligation.

If coupon has been removed, just send us a postcard with your name and address to–

FOLEY-BELSAW CO.
60500 FIELD BLDG.
KANSAS CITY, MO 64111

There is NO OBLIGATION and NO SALESMAN Will Call!

FOLEY-BELSAW CO.
60500 FIELD BLDG.
KANSAS CITY, MO 64111

RUSH COUPON TODAY! FREE BOOK

☐ **YES,** please send me the FREE booklet *"Lifetime Security"* and full details on your 30-Day Free Trial Offer. I understand there is No Obligation and that No Salesman will call on me.

NAME _____

ADDRESS _____

CITY/STATE _____ ZIP _____

MOLD, PLANE and TURN
In Your Shop or On the Job

Join countless professionals and hobbyists who've made W&H woodworking tools part of their workshops. You'll find these unique and rugged 100% American-made machines worth every penny you invest in them.

Introductory Discounts and FREE 30-Day Trial from Williams & Hussey.

Molder/Planers for Shop and Jobsite

America's most versatile combo-function shop tool molds, planes and edges—and it's so portable, you can bring it out to the site! Available in three models for power infeed/outfeed, power infeed, or manual operation. Molds, planes & edges 15′ per minute—even oak! Duplicates virtually any molding between 3/4″ deep x 7″ wide. Converts from molder to planer *in less than two minutes* because *you change only the blades*, not the arbor! Edges boards of *any* width, thanks to the open-sided design.

Picture Frames • Crown Moldings • Raised Panels • Boat Decks • Casings • Sashes • Rails

5-YEAR WARRANTY

- 100% American Made
- Molds, Planes & Edges
- Weighs Only 85 lbs.
- Serrated Steel Roller
- 2-Minute Changeover

Free 30-day trial!

12″ Power Lathe for Serious Woodworkers

Built like a battleship, with flat, machined-steel ways that *can't* sag; massive cast-iron headstock and tailstock—*no* cheap plastic or thin, stamped-steel housings! Ingenious threadless chuck lets you mount your workpieces, sanding wheels, buffers, and drills inboard *or* outboard. Four speed operation; 46″ between centers. *Free* 30-day trial!

10-YEAR WARRANTY
• 100% American Made • Works Inboard & Out
• Machined-Steel Ways • 46″ Between Centers

BUILT TO GO THE DISTANCE.

Introductory Offer. Limited Time Only.
WRITE OR CALL FOR *FREE* LITERATURE!
Please send information about the
☐ MOLDER/PLANERS ☐ LATHE
CALL TOLL FREE
1-800-258-1380
In N.H. (603) 673-3446

Name _____

Street _____

City _____ State _____ Zip _____

Williams & Hussey Machine Co.
Elm St., Dept.235IA, Milford, NH 03055

TOOL CITY BEATS ANY AD PRICE THIS ISSUE FREIGHT PREPAID (USA)

SENCO NAILING GUNS

MDL #	DESCRIPTION	PRICE
LSII	Pin nailer ⅝ to 1"	$259
SNI	Finish nailer1-1½"	$259
SFNII	Finish nailer 1½-2½"	$399
K	Finish stapler 1-1½"	$259
J	Upholstery stapler 5/32"-5/8"	$129

Call for fastener prices

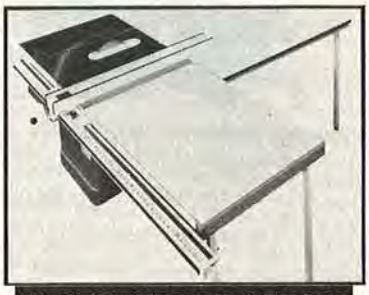

BIESEMEYER RIP FENCES

40" Home Shop $199
50" Commercial $289

Call for other Biesemeyer Products

FREUD

No.	size	teeth	use	price
LU72m10	10"	40	general	$34.50
LU73m10	10"	60	cut-off	$35.00
LM72m10	10"	24	ripping	$36.95
LU82m10	10"	60	cut-off	$44.95
LU85m10	10"	80	super cut-off	$63.00
LU82m12	12"	72	cut-off	$85.95
PS303	7¼"	40	general	$24.00

ALL FREUD ROUTER BITS AND SHAPER CUTTERS ON SALE
Phone for sale prices
15 piece Freud router bit set $139.00

FORSTNER BITS

4 piece set l/2, 5/8, 3/4, 1" $32.95

MAKITA

ALL MAKITA TOOLS
30-45% OFF • PHONE FOR PRICE

HITACHI

All Hitachi Tools
30-45% OFF • PHONE FOR PRICE

MILWAUKEE

ALL MILWAUKEE POWER TOOLS
25-40% OFF • PHONE FOR PRICE

BOSCH

ALL BOSCH POWER TOOLS
25-45% OFF • PHONE FOR PRICE

PORTER CABLE

ALL PORTER CABLE POWER TOOLS
25-45% OFF • PHONE FOR PRICE

FREE WITH ANY ORDER
#1 PREPAID FREIGHT
#2 2-YEAR SUBSCRIPTION TO TOOL CITY CATALOG
#3 7-PC. NUTDRIVER SET RETAIL VALUE $19.00

OUTSIDE CALIF. 1-800-423-7899
Inside Calif. (213) 802-1236

or personal check

Open Monday-Saturday 8:00 am—5:30 pm

WE SHIP IT FAST!

TOOL CITY

14136 E. FIRESTONE BLVD.
SANTA FE SPRINGS, CA 90670

FINGER-SAVER

SHOPHELPER™ SAFETY GUIDES

A totally interchangeable system for controlling stock on saws, shapers and other stationary tools. Single direction bearings guard against kickback and provide smooth, even cutting. Additional mounting brackets allow quick easy interchangeability of guides on machinery. Set, complete with brackets, **$79.50.**

See your local dealer or call: 800-344-7455. In CA: 800-828-8833.

Help develop our natural resources.

The kids of today are the doctors and nurses, the engineers and scientists, the teachers and journalists, the leaders of tomorrow.

Only with your help can they be assured of a first-rate college education because today colleges are having a hard time coping with the high costs of learning.

Please give to the college of your choice.

Your contribution will help develop our country's most valuable natural resources.

Invest in the future of America. Give to the college of your choice.

A PUBLIC SERVICE OF THIS PUBLICATION AND THE ADVERTISING COUNCIL. Ad Council. CFE. COUNCIL FOR FINANCIAL AID TO EDUCATION INC.

CHOOSING THE RIGHT ADHESIVE

You're in a sticky situation if your glue won't stick. How do you choose the all-around best adhesive for the job?

Print this article

Many home woodworkers don't spend much time thinking about adhesives until they don't work. But learning a little about different types of adhesives makes good sense for any wood hobbyist interested in seeing that things go right.

TYPES OF GLUES, ADHESIVES, AND CEMENTS

You can probably handle any gluing task with a product from one of four general classes: animal glues, polyvinyl acetate (PVA) resin adhesives, thermosetting adhesives, and specialty bonding agents.

Animal glues, which include hide glue and casein glue, were once used widely by woodworkers but have been replaced by newer PVA products in most applications.

Traditional hide glues must be heated in a glue pot, so most woodworkers today prefer ready-to-use varieties. Hide glues sometimes are used for veneering because they can be reheated to allow for adjusting of pieces. This characteristic has a negative side, though; hide glues

resist heat poorly. They also exhibit poor resistance to moisture.

Hide glues have a long assembly time—the period from application to the point at which the glue can no longer be worked. They can only be used in warm conditions, and they need to be clamped for relatively long periods. For best results, allow your glue joints to cure overnight.

Casein glue—made from milk protein—comes as a powder that you must mix thoroughly with cold water. It exhibits good strength, moderate water resistance, and, because it is nontoxic, often has been used on toys. Because this glue will work at any temperature above freezing, casein is ideal when working in cooler temperatures. It will stain some dark woods and is abrasive to cutting tools.

PVA resin glues are currently the most popular general-purpose woodworking adhesives. Polyvinyls, as they are commonly called, come in white and yellow varieties. These adhesives can be applied directly from the plastic squeeze-type container—for large surfaces, many woodworkers like to use a brush to spread them.

They are strong and require short clamping times. Depending on the temperature of the wood, polyvinyls' clamp time ranges from ½ to 3 hours. Do not sand or work the wood, however, for at least 24 hours. Removing the wood before this time will cause a sunken joint and a low spot in the project.

White PVA adhesives can be used for any interior woodworking project not requiring waterproof joints. Most woodworkers call this adhesive "white glue." It is economical, dries to a colorless glue line and is nontoxic, which makes it a good adhesive for children to use. It's also easy to apply.

Yellow glue, or as it is technically named, aliphatic adhesive, is a more recent PVA innovation. This adhesive works much the same as white glue, but it gets tacky more quickly, is stronger, and resists heat and moisture better. Yellow glue sands

Continued

This VET Did It – and YOU Can Do It Too!

"War injuries left me badly handicapped, but now I'm a financial success as a Locksmith, thanks to your training. Besides, the work is fascinating. If I can do it anybody can." — Glen Johnson, Larned, Kan.

Make Up to $26.00 an Hour — even while learning!

Train FAST at Home!

Be a LOCKSMITH!

If you enjoy fixing things, you're a "natural" to make hundreds of EXTRA DOLLARS a year in the fascinating business of Locksmithing. Rising crime has increased demand for service a thousandfold. **Yet there's only one Locksmith for every 17,000 people!**

COLLECT CASH PROFITS ALMOST AT ONCE!

You're "in business" ready to make $10 to $26.00 an hour a few days after you begin Foley-Belsaw's shortcut training. Easy illustrated lessons complete with ALL practice equipment **PLUS**

- **ALL TOOLS YOURS TO KEEP**
- **KEY MACHINE YOURS TO KEEP**
- **EXPERT PERSONAL ASSISTANCE**
- **BUSINESS-BUILDING HELP**

enable you to get your share of this always-profitable business. Hundreds we've trained are doing it. So can YOU.

MAIL COUPON to discover how Locksmithing can keep the extra money coming in during spare time — or in your own full-time business. Ideal for retirement—good jobs, too.

FOLEY-BELSAW INSTITUTE, 10726 Field Bldg. Kansas City, Mo. 64111

N. Hunt, Wilmington, Del.—"I make $50 a week extra."

R. Davis, St. Louis, Mo.—"I cleared $110 last Saturday."

Ed Boyle, Pittsburgh, Pa.—"My business going at top speed. I'm moving to bigger quarters."

FREE

THIS DO-ALL PRO **KEY MACHINE YOURS TO KEEP!**

FREE

Can add $50 to $100 a week to your income . . . and doesn't cost you a penny extra!

MAIL THIS COUPON • NO SALESMAN WILL CALL

FOLEY-BELSAW INSTITUTE, 10726 Field Bldg. Kansas City, Mo. 64111

FOLEY-BELSAW

Rush **FREE** book, "Keys to your Future."

Name_____

Address_____

City_____ State_____ Zip_____

DALCRAFT'S 1985 Furniture Design Catalog provides a source for hard to find FULL-SIZE PLANS ■ Designs include Gun Cabinets ■ Cradles ■ China Cabinets ■ Swivel Chair & Popular ROLL TOP Desk ■ Over 270 Projects! Featuring Early American ■ Spanish ■ Modern and newly added QUEEN ANNE style groupings ■ Also Decorative Hardware to compliment Dalcraft designs ■ In each catagory you'll find Family room ■ Dining room ■ Bedroom and Decorative Accent plans ■ Blueprints are FULL-SIZE with Bill of Materials and sources for hard to find hardware items ■ perspective and exploded view drawings

□ $1.00 (3rd. Class)
□ $2.00 (1st. Class)
Refunded with first order.

Send To
DALCRAFT, INC.
DEPT. GW-9/5, P.O. BOX 746
STARKVILLE, MS 39759

P.O. BOX 746 STARKVILLE, MS 39759 601-324-1314

RIGHT ADHESIVE

well and isn't affected by solvents found in many finishes. It can be used over a wide range of temperatures (45° to 110° F.).

Thermosetting adhesives exhibit exceptional qualities of strength and water resistance and can be used effectively for many indoor and outdoor projects. Upon application, they undergo a chemical reaction which makes them more permanent than PVA. Thermosetting adhesives are, however, more expensive and require mixing.

Urea-formaldehyde adhesive, a very strong and durable thermosetting adhesive, is sometimes marketed under the name "plastic resin." It must be used at temperatures of 70° F. or above. Joints must be made accurately for the adhesive to work well, since it will not fill the gaps in poor-fitting assemblies. Strong clamping pressure should be employed with this adhesive and clamps should remain in place for at least 12 hours.

Resorcinol-formaldehyde adhesives are another form of the thermosetting type. These completely waterproof, high-strength adhesives are excellent for outdoor furniture and other projects that must withstand the elements. Even boats can be glued with resorcinol.

Resorcinols come in two parts, packaged in separate cans. The dark liquid is the resin and a light-colored powder is the hardener. When you mix the parts together, you have from two to three hours to use it before it hardens in the mixing container. Workpieces must be firmly clamped until the adhesive cures. Depending on board thickness, clamps should be kept in place from 12 to 24 hours.

Resorcinols require special handling since both the resin and the hardener can damage skin and eyes.

Specialty bonding agents include a number of products that see specific, and often limited, use in home workshops.

Epoxy adhesives represent one of the strongest synthetic adhesives made. Perhaps most familiar for general homeowner repairs, epoxies become expensive when used to glue large areas.

Epoxy adhesives require that you mix together two separate ingredients—an epoxy resin and a hardener. Once mixed, the reaction is irreversible. Epoxies have high strength and minimal shrinkage. They offer moisture resistance and form an excellent moisture barrier when used as a coating (on outdoor projects, for instance). Epoxies also let you bond dissimilar materials such as stone to wood or metal to wood. Because of the permanent reaction

Rodman HAS TRU-GRIP CLAMPS!
World's Fastest, Most Versatile Clamping System

FREE ONE 24" CLAMP 'N TOOL GUIDE WITH POWER TOOL PURCHASE

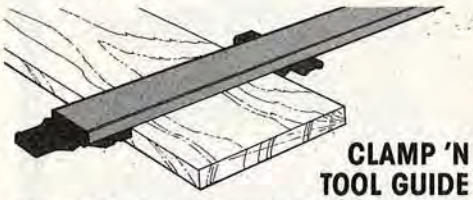

CLAMP 'N TOOL GUIDE

THE "ALL-IN-ONE" TOOL... BAR CLAMP – FENCE – STRAIGHT EDGE & POWER TOOL GUIDE!

Short powerful jaws provide instant edge-to-edge clamping. As a FENCE or GUIDE, it attaches ten times faster than 'C' clamping and won't surface mar wood. As a BAR CLAMP, the unique low profile jaws enable you to clamp

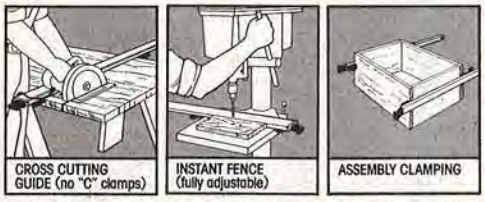

butt-jointed corners (down to ½" material) and also allow edge clamping. These clamps always lay flat for easy assembly set-ups. World's fastest, most versatile bar clamp!

TWO SIZES AVAILABLE:
☐ 24" Grip $22.95
☐ 50" Grip (panel size) $32.95

TRIPLE PLAY 3 CLAMP SPECIAL
One 50" Clamp 'N Tool Guide & Two 36" Back to Back Bench Clamps – $99.00

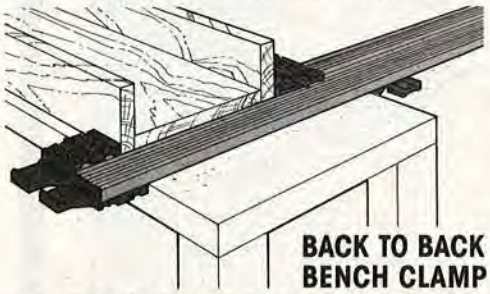

BACK TO BACK BENCH CLAMP

THE "INSTANT SET-UP," WIDE CAPACITY, PORTABLE BENCH CLAMPING SYSTEM!

Double sided, edge-to-edge clamping! BOTTOM JAWS clamp to your bench while low profile TOP JAWS clamp your workpiece for "obstruction-free" sanding, planing, doweling, carving, varnishing, stencil routing, etc. The

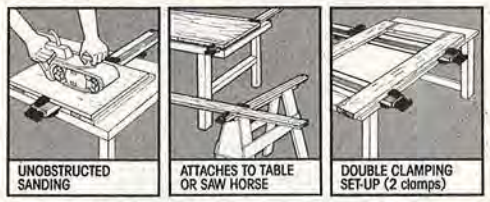

fastest and widest capacity clamping set-up for assembly, glue-ups and holding jigs. With two (or more) bench clamps, you can create any size clamping capacity just by spreading the clamps apart. THE TRIPLE PLAY SPECIAL GETS YOU TWO 36" BACK TO BACKS!

TWO SIZES AVAILABLE:
☐ 18" Grip $32.95
☐ 36" Grip $39.95

PORTER-CABLE

Model 690 — Regular $189.00 — ☐ Special $149.00

Model 315-1 — Regular $166.50 — ☐ Special $139.00

RYOBI

Model W-640 — Regular $158.00 — ☐ Special $99.00

BOSCH

Model 1581VS — Regular $209.00 — ☐ Special $149.00

ORDER TOLL FREE!
Inside Calif., 1 800 428-3809
Outside Calif., 1 800 228-1806
MasterCard or Visa...or send Check or Money Order with ad clearly marked.
In California add 6% sales tax
(Prices include freight within Continental U.S.A.)

Rodman
RODMAN & COMPANY, INC.
1827 S. Hope St., Los Angeles, CA 90015

when you mix epoxy, it's important to mix only the amount you need for one application.

Contact cements, rubber-based bonding agents widely used for gluing plastic laminates and veneers, don't require clamping. The cement is first applied to both the laminate and core surfaces. Next, it is left standing until completely dry to the touch. When you bring the two surfaces together, they adhere to each other instantaneously, forming a permanent bond that cannot easily be adjusted. Be certain to use nonflammable contact cements and keep the work area well ventilated.

Cyanoacrylate adhesives set faster than they can be pronounced. Many woodworkers call these adhesives "super glue" since they display exceptional strength and set in seconds. They can only be used on nonporous materials, however, so they see limited use in most woodworking shops. If you ever need to bond a small piece of metal to glass, they're just the thing. But because they also do a good job of gluing skin to skin, they must be used with care.

ADDITIONAL POINTERS

- Always read the label instructions thoroughly before you use any type of adhesive.
- Some glues, notably quick-set epoxies, have a limited shelf life. Take this into account when you buy.
- When buying white glue, which has a long shelf life, consider purchasing a gallon or more at a time—you'll save considerably this way if you know you'll be using lots of glue.
- Keep leftover adhesives tightly sealed and store them in a cool, dry environment.
- Take into account the amount of "open time" you'll have in assembling your project. You don't want a fast-drying glue if you'll have a lot of parts to fit and clamps to adjust. ■

Photograph: Bob Calmer

DON'T MISS OUT!
The GENERAL 12"
Four Speed Wood Lathe
1-800-387-9789

12" FOUR SPEED WOOD LATHE
c/w Spur & Cup Centers, 4" × 12" Tool Rests, 3" Face Plate, Belt & Motor Pulley. 140 lbs.

Model #160 is our "standard duty" lathe. It often exceeds other manufacturers' heavy duty classification. This is apparent in the all-cast construction, and, when purchased with the cabinet/stand, in the heavy welded steel used.

The GENERAL 12" Wood Lathe At-A-Glance

	Standard Duty Model #160
Capacities:	
Swing - over bed	12"
Swing - over gap	15" for 3"
Distance between centers	38"
Spindle:	
Nose - inbound (8 RH threads/inch)	1"
Nose - outbound (8 LH threads/inch)	1"
Hole completely through spindle	¾"
Headstock & Tailstock Taper	#2 Morse
Spindle Speed	850/1375/2160/3500 Rpm
Height: Floor to center of spindle	41"
Overall Dimensions:	
Width	16"
Height	44½"
Length	58½"
Shipping Weight:	
Lathe only	140 lbs.
c/w Cabinet	290 lbs.
Recommended Motor (1725 RPM)	1 to 1½ Hp

Most woodcrafters purchase only one lathe in their lifetime – if it's a General, it is one they can count on to be in the family for generations.

GENERAL 12" Standard Duty Four-Speed Wood Lathe
$625
Motor & Switch Extra.
Shipped freight collect • No other charges

VISA SEND FOR OUR CATALOG OF OTHER FINE WOODWORKING MACHINES MasterCard

J. Philip Humfrey Ltd.
3241 Kennedy Road, Unit 7
Department WM 9/10
Scarborough, Ontario M1V 2J9 (416) 293-8624

☐ I enclose $1.00 (refundable against purchase). Please rush my catalog.

Name _____
Address _____
City _____ State _____ Zip _____

EASY WOOD FINISHING with
WATCO®
The Original
DANISH OIL FINISH

You'll be amazed at how easy it is to finish wood beautifully with Watco Danish Oil. Watco gives wood that natural hand-rubbed look with long-lasting durability. And because Watco is **IN** the wood . . . not on it like temporary surface coatings . . there is no finish that will wear off. Watco Danish Oil is ideal for furniture, antiques, paneling, cabinets, doors, and trimwork. It's also safe for butcher blocks, cutting boards, and children's toys. Choose from 8 beautiful finishes . . . Natural, and Medium, Dark, and Black Walnut shades, and Cherry, Golden Oak, Fruitwood, and English Oak colors.

Send today for **"FREE"** color booklet **"HOW to Beautifully Finish Wood"** and the name of your nearest Watco distributor.

WATCO-DENNIS CORP., 1756-22nd St. Santa Monica, CA 90404, Dept. BH-W95
Name _____
Street _____
City _____
State _____ Zip _____
213/870-4781

Information

Print this article

WORTH WRITING FOR

You can get useful ideas and product information by mail. Use the coupon in this section to order your choice of literature listed below.

SCROLL SAW AND LATHE INFORMATION — More than 20 pages of information, including full-color photos, on HEGNER precision scroll saws, HEGNER lathes, and HEGNER duplicators. Find out why these machines are considered state of the art, and what to look for when shopping for scroll saws or lathes. AMI, LTD. $1.00. *Circle No. 1.*

WOODWORKING PROFESSIONALS ONLY — Now save 50% on machinery, 70% on operating costs! How? By using the world's finest production quality universal machine. Commercial durability, utmost precision, set-up in seconds. No other tool combines usable capabilities like FELDER. Thousands sold all over the world. Now available in America through AMI. Send for brochure. AMI LTD. $1.00. *Circle No. 2.*

WOODWORKING PLANS FOR HOMESHOP — Stacking bookcase, curio cabinet, stacking file cabinet, grandfather clock, Bentwood cradle, and more. Step-by-step detailed procedural plans include material list, suggested tools, and fully illustrated steps. Price of brochure is refunded with first purchase. ABOUT TIME PLANS. $1.00. *Circle No. 10.*

OVER 400 WOODWORKING DESIGNS — We now offer thirty-one packets of blueprint plans and full-size patterns with both the home and commercial craftsman in mind. Enjoy making toys, games, children's items, whirligigs, folk art, plaques, magazine racks, shelves, kitchen and household items, birdhouses, plant stands, and more. Simple enough for the beginner, fun and profitable for the pro. Send for illustrated brochure plus sample pattern. ACCENTS IN PINE. $2.00. *Circle No. 12.*

FOR AMERICAN-MADE TOP QUALITY WOODWORKING EQUIPMENT — Send for our catalogs on all the top American-made machinery like Powermatic and Delta. We also carry hard to find decorative hardware like Baldwin and Slage. ADDKISON HARDWARE. $2.00. *Circle No. 15.*

HOW-TO-CLAMP-IT CATALOG — Illustrated catalog describes over 40 different styles of genuine "Jorgensen" and "Pony" hand clamps, including clamp selection guide, working advantages, and do-it-yourself project applications. ADJUSTABLE CLAMP CO. Free. *Circle No. 20.*

MODERN HARDWARE FOR CRAFTSMEN — European concealed hinges for wood and glass doors are our specialty. No-bore glass door hinges plus everything else for your stereo cabinet from casters to lid hinges. Make your kitchen cabinets more functional with wire shelves, baskets, and slides. Build a computer cabinet using our TV extension slides. No minimum order requirements and our prices are low. ALLEN SPECIALTY HARDWARE. $1.00. *Circle No. 30.*

THE AMERICAN WOODWORKER MAGAZINE — offers projects on beginning, intermediate, and advanced levels in each issue. Also included are in-depth instructional articles on all phases of woodworking, plus general interest articles. We will offer plans for jigs and fixtures for your shop. A one year subscription is only $10.00 (inside U.S.). Send for our brochure giving complete details plus a coupon good for ⅓ off the regular price. THE AMERICAN WOODWORKER. $1.00. *Circle No. 45.*

TOOL CATALOG — Available from Anglo American Enterprises, the world famous Recod Marples Tool Catalog featuring the finest woodcrafting tools available. Send for catalog and price list. ANGLO AMERICAN ENTERPRISES CORP. $2.00. *Circle No. 50.*

WOODWORKERS — Artistry in Veneers' catalog features many products. Among them are veneers, inlays, marquetry kits, carving sets, dollhouses, boats, ducks, clocks, wood finishes, and tools. Our library of "how-to" books and professional services can broaden your knowledge of fascinating hobbies in wood. Send for our woodworker's catalog. Price of the catalog is deducted from your first order. ARTISTRY IN VENEERS, INC. $1.00. *Circle No. 65.*

DISCOVER VENEER — Artistry in Veneers' do-it-yourself guide to veneering shows you how simple this craft really is to master. Our color brochure identifies the most popular species of veneer and educates you on veneer matching, taping, and gluing. Send for your introductory brochure. ARTISTRY IN VENEERS, INC. 50¢. *Circle No. 66.*

CATALOG OF PLANS AND KITS — A selection of functional projects, unique gifts, and decorative pieces for home or office. Included are a sandpile scooper, super bunk beds, miniature two-story outhouse, birthday calendar, and many more. See our ad elsewhere in this issue. BALLART DESIGN. $1.00. (Refundable) *Circle No. 100.*

SHIP MODEL KITS — Fully illustrated 32-page catalog of scale ship model kits from America's oldest model ship company. Build a beautiful museum quality model ship with the simplest tools and average skills. BLUEJACKET SHIP CRAFTERS. $2.00. *Circle No. 130.*

FREUD HAND TOOL CATALOG — An exciting new line of precision hand tools. These tools reflect the fine quality of craftsmanship, durability, and performance that you have always associated with Freud products. From choice boxwood to chrome vanadium steel, these tools exceed all expectations of precision woodworking instruments. BRADY SUPPLY CORP. $1.00. *Circle No. 145.*

WOODWORKING EQUIPMENT — More than 75 pages filled with woodworking machinery, portable power tools, and supplies. Detailed information on all types of equipment for professional and home shop needs. Powermatic, Rockwell, Hitachi, Makita, and more. BRATTON MACHINERY AND SUPPLY, INC. $4.50. *Circle No. 150.*

CANE AND BASKET SUPPLIES — Every item used in caning and basketry is pictured in this new catalog for hobbyists and others interested in caning, rushing, etc., for either fun or profit. CANE & BASKET SUPPLY CO. $1.00. *Circle No. 230.*

CLOCK MOVEMENTS CATALOG — The 55-page catalog contains over fifteen different quartz clock movements, including pendulum, strike, and chime movements. Also shown are dials, hands, numerals, and accessories. It features movements made in Japan by the world's largest producer of quartz timepieces. CAS-KER CO. $1.00. *Circle No. 250.*

NO MORE COFFEE CAN CATCHALLS — An end to frustrating searches for the right parts. Our workbench organizers come empty or full of the most needed woodworking or toymaking parts. Constructed of hardwood with heavy-duty corrugated bins and adjustable dividers. Also illustrated in our beautiful color catalog are hundreds of plans, kits, parts, and supplies for toy, wood, and furniture projects. CHERRY TREE TOYS, INC. $1.00. *Circle No. 258.*

MAKE WOODEN CLAMPS AND SAVE 60% — Kits and plans for 8, 10, and 12 in. wooden handscrew clamps. Acme threaded steel rods, components, handles and full-sized plans provided. Kits also available with uncut and precut maple jaws. You decide how much you want to save. Also available in our beautiful color catalog are hundreds of plans, kits, parts, and supplies for toy, wood, and furniture projects. CHERRY TREE TOYS, INC. $1.00. *Circle No. 259.*

MAKE WOODEN TOYS AND PROJECTS — Hundreds of plans, kits, colored and unfinished hardwood parts for all types of toy, craft, and furniture projects (Colonial, Shaker, Primitive, and Modern). Also available: tools, wood, finishes, and supplies. For novice to experienced woodworkers. Bulk prices available. Send for beautiful color catalog subscription. CHERRY TREE TOYS, INC. $1.00. *Circle No. 260.*

CONOVER'S UNIQUE HANDMADE TOOLS — 16-page catalog of unique reproduction and hard-to-find tools, such as miniature brass palm planes, wood threading tools, and spokeshaves. These high quality tools are made by the Conover family in Parkman, Ohio, and by dealing direct with the manufacturer you save. CONOVER WOODCRAFT SPECIALTIES, INC. $1.00. *Circle No. 265.*

TURN BED/PORCH POSTS — Conover Woodcraft's unique, super high quality lathe has unlimited center length. It can turn porch posts or set up as a bowl lathe — your choice. Manufactured in Conover's Parkman, Ohio factory, this lathe has heavy cast-iron construction with Timken roller bearings and 16 in. swing. Suitable for heavy faceplate work, metal spinning, or spindle turning. 16-page catalog. CONOVER WOODCRAFT SPECIALITIES, INC. $1.00. *Circle No. 266.*

TAKE A WOODWORKING VACATION — at the Conover Workshops summer program at Hiram College in Hiram, Ohio. Intensive one-week courses include room, board, tools, materials, and instructions in $575. tuition. Conover worries about the details so you can worry about woodworking. 1985 session from June 16-28. Courses offered: Windsor Chairmaking, Handtool Techniques and Joinery, Woodturning. Send for brochure. THE CONOVER WORKSHOPS. Free. *Circle No. 267.*

WOODWORKERS TOOLS AND MATERIALS — 116-page catalog offers fine hardwoods, veneers, inlays, picture molding, wood finishes, carving blocks, cabinet hardware, and cane. Specialty woodworking tools, shop equipment, plans, instruction books. ALBERT CONSTANTINE AND SON INC. $1.00. *Circle No. 270.*

BUILD HEIRLOOM CLOCKS — Now create beautiful heirloom quality clocks right in your own home. Choose from magnificent chiming grandfather clocks to charming wall clocks. 32-page catalog also offers a selection of music boxes, music movements, traditional barometers, and a huge variety of quartz movements and dials for custom clock building. Satisfaction guaranteed. CRAFT PRODUCTS CO. Free. *Circle No. 273.*

INDUSTRIAL QUALITY CUTTING TOOLS — DML offers 1,002 different cutting tools, each engineered for a specific task, all made in America. Four information-filled brochures detail carbide-tipped saw blades, bits, and cutters: concise copy explains applications, photos show tool configurations, and charts list sizes. DML, INC. $1.00. *Circle No. 303.*

INDUSTRIAL QUALITY CUTTING TOOLS — Three large, colorful wall posters keep DML's huge line of carbide-tipped cutting tools close at hand for easy reference. Separate posters for saw blades, shaper heads (with diagrams of each cut), and router bits. Each features graphic displays of the tools, capabilities, and sizes. DML, INC. $3.00. *Circle No. 304.*

THE HARDWARE STORE IN YOUR MAILBOX — Select from over 1,500 items. Fasteners, organizers, specialty tools, welders, saw blades, air tools . . . all at super low prices. For handymen, do-it-yourselfers, and professionals. D.R.I. INDUSTRIES. $1.00 (Refundable with order). *Circle No. 307.*

FULL-SIZE PLAN CATALOG — Dalcraft 1985 furniture design catalog provides a source for hard-to-find, full-size plans. Over 270 projects. Early American, Spanish, Modern, and Queen Ann styles.

TO ORDER THESE BOOKLETS, USE COUPON ON PAGE 116

BLACK & DECKER THINKS FUN SHOULDN'T BE TOO MUCH WORK.

Big, bulky, hard-to-handle tools can take the fun out of almost any hobby.

That's why we made our Precision Power Tool so easy to use. (Its thin neck slips into your hand as easily as a pencil; yet its durable ball-bearing design can supply you with up to 20,000 RPM.)

It takes the grind out of etching glass.

It has a keyless chuck that makes changing bits a snap, a variable speed power adaptor for precise power control and our exclusive 2-Year Home Use Warranty.

It shines at polishing.

The deluxe kit comes with all the accessories you need to grind, deburr, etch, carve, drill, cut, shape, polish, buff, and even sharpen.

And with over 100 available attachments you can add, we're sure you can think of some uses of your own.

The Black & Decker Precision Power Tools.

Designing them took a lot of work. But using them doesn't.

BLACK&DECKER™
IDEAS AT WORK.™

SPECIAL OFFER

Now, for a limited time, receive a free Precision Power Tool Jigsaw (#9817) or Orbital Sander (#9819) with the purchase of our Precision Power Tool kits (#9803, 9804, 9805). Offer good from August 25 through December 31, 1985.

For more information on the complete line of Black & Decker Precision Power Tools, write: P.O. Box 40903H, Raleigh, NC 27629.

© 1985 Black & Decker (US) Inc.

When you order my 16-piece Forstner Bit Set at $149.95

It's like getting the 7-piece set plus the 1⅛″ and 2⅛″ bits –

FREE!*

Only a Forstner Bit could drill all these arcs at all these angles and make perfectly clean flat bottomed holes even through knots, end grains, and veneer!

Just buying the 7 sizes from 1¼″ to 2″ at their individual prices, you'd spend $151.15.

But saving money isn't the real reason you should invest in these bits. Superior performance is.

A clean, smooth, flat bottom hole is essential for strong dowel joints. And my Forstner bits make an absolutely clean hole, with only a tiny notch in the center of the perfectly flat bottom. That makes them the bits of choice for furniture making, for starting rabbets or grooves, for making pocket holes to attach rails to table tops.

And because the outer rim, not the center spur, guides the bit, you can use your Forstners to drill any arc of a circle, at any angle – even through knots, irregular grain, or veneer. The 3/8″ shanks fit your drill press or 3/8″ and 1/2″ portable drills.

Order the 7-Piece Set for just $49.95 and receive all sizes, 1/4″ through 1″, plus the **FREE** Storage Carousel.

FREE
CAROUSEL
with any set

FREE
DIAMOND HONE
with 16-Piece Set

For greatest value, take the 16-Piece Set for $149.95. You receive all 16 bits plus the **FREE** Carousel and **FREE** Diamond Hone to keep all your Forstner Bits sharpened to the peak of performance.

30-Day Money Back Guarantee

ORDER NOW–WHILE SUPPLIES LAST!

the Fine Tool Shops

The Fine Tool Shops, Inc.
Dept. **WM85**
20 Backus Avenue,
Box 1262
Danbury, CT 06810

ORDER TOLL FREE
1-800-243-1037
In CT, 797-0772

Ship to _____
Address _____
City _____ State _____ Zip _____

Qty.	Item	Prod. #	Price ea.	Total
	7-Pc. Forstner Bit Set with **FREE** Carousel	200-2537	$ 49.95	
	16-Pc. Forstner Bit Set with **FREE** Carousel, Hone	200-2587	$149.95	
	Carousel only	200-2580	$ 12.95	
	Hone only	500-1115	$ 9.95	
		Subtotal		
		Shipping/Handling		$3.00
		CT 7½% Sales Tax		
		TOTAL enclosed		

☐ Send **FREE** Full Color Tool Catalog

☐ Check Enclosed
☐ Charge my
☐ VISA ☐ MasterCard
☐ AmExpress

Account # _____ Exp. Date _____

Blueprints are full-size with bill of material and source for hard-to-find hardware items. Prospective and exploded view drawings. DALCRAFT INC. $1.00 Refundable. *Circle No. 309.*

SIMPLE SYSTEMS FOR WOOD STAINING AND FINISHING — A 24-page, 4-color booklet gives plenty of helpful tips for better results. Included are tips on how to apply a bartop finish in one day, prevent wood from yellowing, create stain colors, apply water clean up stains and finishes, and more. DEFT, INC. 50¢. *Circle No. 315.*

BUILD IT YOURSELF — Why buy it when you can build it? Illustrated catalog of hundreds of interesting and fun items you can create yourself for personal use or profitable sale. Our 1986 catalog contains toys, games, plaques, puzzles, birdhouses, planters, accent furniture, and much more. All patterns are full-size blueprints — no enlarging is necessary. Simply trace and create. DESIGN GROUP. $1.00. *Circle No. 320.*

DO-IT-YOURSELF LUMBER DRYING — This 22-page booklet *Kiln Chamber Construction Guide and Operation Manual* is designed for the individual wishing to dry his own lumber with a minimum investment of money, time, and space. Included are principles of dehumidification lumber drying, selection of which dryer is best for you, and kiln chamber plans and construction information. Also you will receive a questionnaire you can fill out and return. Once completed and returned you will receive free a computerized evaluation of your drying needs including investment considerations, operating costs, and payback. EBAC OF AMERICA, INC. $5.00. *Circle No. 400.*

MULTI-PURPOSE HOME WOODWORKING SYSTEM - The Emco Start-2000 is a table saw, band saw, moulding machine and disc sander and you can change operations in less than 30 seconds. One big 2 hp. motor does it all. With optional accessories you can do wood turning, mortising, horizontal drilling, and more. Send for four-color information. EMCO* USA. Free. *Circle No. 402.*

EdLco — STAY IN THE WOODS WITH US — Educational Lumber Company is pleased to offer you our new catalog, stacked with excellent buys at delivered prices. Available to you are over 21 species of imported as well as domestic hardwoods, softwoods, turnings, shorts, veneers. All our lumber is kiln dried. As school shop suppliers for 34 years, we know our lumber. It is top-grade. Send today and receive your BONUS GIFT: 4 new furniture designs. EDUCATIONAL LUMBER CO., Inc. $2.00. *Circle No. 420.*

DO-IT-YOURSELF GRANDFATHER CLOCK KITS — Direct from world's largest manufacturer of grandfather clock kits. Prices starting at under $280 including West German Westminster chiming movement. Choose from black walnut, cherry, and oak. Other quality heirloom kits also available. Send for brochure. EMPEROR CLOCK CO. 50¢. *Circle No. 450.*

COMPLETE FASTENERS FOR THE HOME WOODWORKER — Specialized fasteners for all types of wood — particleboard screws, hardwood and softwood screws. We have all lengths from ½ in. to 3 in. in various diameters. All types of packaging available including our Handipak designed for the home, small volume user. Send for complete color brochure. A must for the home woodworker. EQUALITY SCREW CO., INC. $1.00. *Circle No. 460.*

FINE TOOL SHOPS' CATALOGS — Presently, the Fine Tool Shops publishes a new full-color catalog every three months. It illustrates the world's finest woodworking tools at prices guaranteed to be the lowest in the mail order industry. In addition, there are special discounts for continuing customers, incentive bonuses, and name brand U.S. made tools at spectacular savings. THE FINE TOOL SHOPS. $1.00. *Circle No. 495.*

RIPSTRATE SAVES FINGERS — for table saw and radial arm saw users. Brochure describes the RIPSTRATE and shows how it gives straighter cuts, speeds, the work, prevents kickbacks, and keeps hands away from the blade. FISHER HILL PRODUCTS. 25¢. *Circle No. 530.*

EXCELLENCE IN SHARPENING EQUIPMENT — This two-color, 56-page catalog from Foley-Belsaw Co. provides information on its complete line of equipment used for sharpening home, garden, and industrial shop saws and tools. Each machine is

TO ORDER THESE BOOKLETS, USE COUPON ON PAGE 116

The Toymaker Supply Company

Largest Selection of Wood Toy Patterns, Parts & Books

FREE Catalog
No. T9
Tahoe City, CA
95730-5459

We Feature Grampa's Workbench Wood Toy Patterns.

Steam Train Pattern
F1: $5.98 ppd

24 hr Phone No. 916-583-1555

MORE THAN A CATALOG...

Woodcraft is more than a catalog–it's one of the best sources for quality woodworking tools you'll ever discover. We're your source for everything from bit braces to wood borers, from saws to sharpening stones Every item is crafted to meet precise standards of excellence, and backed by our guarantee of satisfaction. Some people may call this a catalog, but if you're a woodworker we think you'll call it indispensable. Send for your FREE Woodcraft Tool catalog today.

WOODCRAFT®
Dept. WBH95 41 Atlantic Avenue,
Box 4000, Woburn, MA 01888

☐ Please send me your FREE tool catalog. WBH95

Name _____
Address _____
City _____
State _____ Zip _____

SUPER SCOOPER

KIDS WILL SPEND HOURS OF FUN IN THE SANDPILE WITH THIS CHILD OPERATED BACKHOE • Works like a real backhoe • 3 foot reach • Swings in a full circle on ballbearing • Develops child coordination and motor skills

Easy to follow plans	$ 4.00
16 guage welded steel bucket	$ 10.50
Heavy-duty swivel bearing	$ 10.50
Complete unit	$165.00

Send check or money order to:
BALLART DESIGN 4606 So. 600 East, #709
Salt Lake City, Utah 84107

HARDWOODS DOMESTIC AND IMPORTED

Veneers

Boat Lumber · Cabinet Lumber
Red Oak · White Oak · Ash · Birch · Birdseye · Teak
Mahoganies · Cherry · Walnut · Maple · Poplar · Basswood
·Bubinga · Pearwood · Osage · Pines · Padouk · Ramin · Rosewood
Wenge · Zebrawood · Bocote · Cocobolo · Che Chen · Ziricote
Oak Mouldings · Dowels · Hardwood Plywoods
Planing · Ripping · Millwork

No Minimum · Shipments Worldwide
30 Yr. Member National Hardwood Lumber Assoc.
Direct Importers of Foreign Hardwoods

United States Mahogany Corp.
746 Lloyd Road, Matawan, NJ 07747
(201) 583-6300
Open Monday thru Saturday

PANEL RAISER™

Zac's carbide tipped **PANEL RAISER**™ bits come in 3 styles, OGEE, COVE, & PROVINCIAL. All 1/2" shank bits are 3-1/2" in diam. w/BB & give a full 1-1/2" raised panel, **$99.50** ppd. All 1/4" shank bits are 2" in diam. & give a 1" or larger raised panel cut, **$65** ppd. To order CALL **800-441-0101** in NY call **212-947-4496.**

ZAC
PRODUCTS INC.
533 WEST 34 ST.
NYC, NY 10001

FINE FINISH
WOOD ENNOBLER

THREE SIMPLE STEPS TO PROFESSIONAL PERFECTION

Prepare wood surface. Wipe on penetrating Sealacell® to repel moisture.

After 12 hours wipe on Varnowax® to enhance the coloring and beauty of the wood.

After 12 hours wipe on Royal Finish® for a satin smooth, stain resistant surface.

Write for **FREE** guide to wood finishing.

GENERAL FINISHES
P.O. Box 14363B • Milwaukee, WI 53214
414 774 1050

SEALACELL 1-2-3
The wipe-on finish that's been making craftsmen proud since 1928.

BAND SAW BLADES
WELDED TO YOUR EXACT LENGTH

WIDTHS	TEETH	PRICE/INCH
1/16"	24 & 32	$.09
1/8" thru 5/8"	3 thru 32	$.05

OTHER SIZES AVAILABLE — INQUIRE
To Figure Price:
Inch Length × Price/Inch + $1.85 Weld Charge
MINIMIM ORDER: $10.00
Add $2.50 for Shipping-Prompt Delivery
PHONE ORDERS –
1 (800) 543-8664 (Outside Ohio)
1 (513) 621-2159 (In Ohio)
VISA or MasterCard Accepted or
Send Payment with Order or
Write for More Information to:
BUCKEYE SAW COMPANY
P.O. Box 14794
Cincinnati, Ohio 45214

SHOPSMITH® OWNERS

Make raised panels using our 3 wing carbide tipped shaper cutters.

M75
M77
M76
M78

Shaper Cutter
(4 1/2" dia.)
List $138
Sale $99
Auxiliary table–$30
(Plan only $8)
Arbor–$22

All prices post-paid to 48 states
Send check, MO; VISA, MC accepted
(C.O.D. - add $3)

MANNY'S WOODWORKER'S PLACE
602 S. Broadway
Toll Free 1-800-243-0713 Lexington, KY 40508 In Kentucky (606) 255-5444

Woodworker's Fantasia Catalog!

36 Pages of Needed Supplies For Woodworkers At Reasonable Prices

- 101 Veneers, Burls, Flexibles, Etc.
- Turning Squares
- Toymaking Supplies
- Carving Blocks
- Cane, Rush, Splint
- Dowels, Spindles, Buttons, Pegs
- Hardwoods
- Patterns
- Books
- Inlays

✓ I Enclose $1.00 - Please rush my new Woodworker's Fantasia catalog of needed supplies, and Free gift offers immediately!

Name _____
Address _____
City _____ State _____

Morgan Woodworking Supplies, Dept. W06M09-D
1123 Bardstown Rd., Louisville, KY. 40204

Learn Decoy Carving

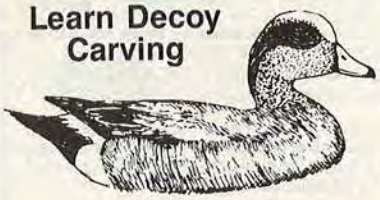

Send $1.00 (refundable) for tool and book catalogues and sample of
THE CARVERS JOURNAL
625 West Main Street
Broussard, Louisiana 70518

NOW! Get in on the PROFITS in SMALL ENGINE REPAIR!

Start your own money making business!

Work part time, full time—right at home—we help you every step of the way.

No doubt about it... as a small engine pro, you can cash in on the huge demand for qualified men in one of America's fastest growing industries. You'll be able to command top hourly rates of from $25.00 to $30.00 per hour — and that's just for labor. A simple tune-up earns as much as $49.95 for less than an hours work, and parts, engines and accessories will add even more to the profits.

Plenty of business waiting for qualified men.

65,000,000 Small Engines Are In Use Today!

That's the official count from the Engine Service Assn., and one-million new engines are being built each month. With fully accredited Foley-Belsaw training, you can soon have the skills and knowledge to make top money servicing these engines. People will seek you out and pay you well to service their lawnmowers, tillers, edgers, power rakes, garden tractors, chain saws, minibikes, snowmobiles, generators, go-carts, paint sprayers, snowblowers . . . the list is almost endless.

Professional Tools and Equipment, PLUS 4 H.P. Engine ALL YOURS TO KEEP... All at No Extra Cost.

NO EXPERIENCE NECESSARY!

You don't need to be a 'born mechanic' or have any prior experience. You can master this profitable trade right at home in your sparetime. Lessons are fully illustrated...so clear you can't go wrong, and with our famous 'learn-by-doing' method you get practical 'hands-on' experience. We also show you how to get business, what to charge, where to get supplies wholesale...all the inside tricks of the trade you need to assure success right from the start.

Send for FREE Facts—Do It TODAY!

NO Obligation—NO Salesman Calls!

You risk nothing by accepting this offer to see how easily you can learn the skills you need to increase your income in a high-profit business of your own. ***Just fill in and mail coupon below (or send postcard with name and address) to receive full information by return mail.***

RUSH COUPON TODAY

Foley-Belsaw Institute
50721 Field Building
Kansas City, MO 64111

FREE BOOKLET! Send for your copy today!

FOLEY-BELSAW INSTITUTE
50721 FIELD BUILDING
KANSAS CITY, MO 64111

FOLEY BELSAW

☐ YES, please send me the FREE booklet that gives full details about starting my own business in Small Engine Repair. I understand there is **No Obligation** and that **No Salesman** will call on me.

NAME_____

ADDRESS_____

CITY_____

STATE_____ ZIP_____

fully illustrated, complete specs and pricing information are provided. FOLEY-BELSAW CO. Free. *Circle No. 550.*

BEAT INFLATION AND HIGH LUMBERYARD PRICES — Turn trees into valuable lumber with the world-famous ONE-MAN PORTABLE SAWMILL. Goes right to the trees — turns out smooth, truecut lumber every time. No crew needed . . . no experience necessary. Send for booklet. FOLEY-BELSAW CO. Free. *Circle No. 551.*

FREE SUBSCRIPTION TO FOLEY-BELSAW NEWS BULLETION — For a limited time Foley-Belsaw will be giving away a 1-year subscription to their 64-page color publication. This publication includes stories and shop tips on all types of woodworking, tool sharpening, upholstery, engine repair, and locksmithing. The magazine, which is published six times a year, includes many special offers on Foley-Belsaw equipment. FOLEY-BELSAW CO. Free. *Circle No. 552.*

CUTTING TOOLS — Freud, USA provides the finest value in carbide cutting tools. From saw blades and boring bits to shaper heads and router bits. Our newest product — shaper heads for the half inch shaper spindle. Send for complete catalog. FREUD, USA. $5.00. *Circle No. 560.*

FULL-SIZE FURNITURE PLANS CATALOG — Illustrates and describes over 180 plans for making furniture of quality found in museums and fine furniture stores. Plans include rolltop desk, cradles, dining tables, chairs, buffets, chests, gun cabinets, poker table, children's furniture, rocking horse, spinning wheels, and more. Bill of materials exploded drawings assist the woodworker. FURNITURE DESIGN, INC. $2.00. *Circle No. 585.*

1984-85 MASTER CATALOG — contains 212 pages of the finest in woodworking hand tools, machinery, and finishing supplies plus over 125 books. Of particular note is the selection of Japanese tools. The format is all four-color. GARRETT WADE CO. $3.00. *Circle No. 600.*

BEAUTIFUL WIPE-ON WOOD FINISHING — is explained in a booklet from a pioneer in wipe-on finishes since 1928. Wood finishes that produce a beautiful hand-rubbed finish without messy brushes or spraying. Specially formulated finishes that simply wipe-on with professional results everytime — guaranteed! Unlike conventional finishes these will never yellow, crack, or craze and they dry dustfree without runs. These finishes will bring out the natural beauty of the wood and never needs waxing. Send today for your wood finishing guide and products catalog. GENERAL FINISHES. 25¢. *Circle No. 630.*

PEG-1000 WHOLESALE — Polyethylene glycol green wood stabilizer, 10 lbs. $17.00 plus $2.90 shipping. Send for additional information. GENERAL FINISHES. 25¢. *Circle No. 631.*

WOODWORKERS — SAVE $500 ON TOOLS — Instead of buying expensive power tools, purchase kits that include the parts, nuts, bolts, and full-sized patterns, with replacement parts always available. GIL-BILT kits with 5-year guarantee for everything from bandsaws to belt sanders. Send for our catalog today. GILLIOM MFG. $1.00. *Circle No. 650.*

COUNTRY FURNITURE PLANS — Our catalog features 14 designs — from country pie safe to mini-barn. Also included are various products for the home workshopper. Send for our latest catalog. Price of catalog deducted from your first order. HAMMERMARK ASSOCIATES. $1.00. *Circle No. 710.*

TOOL CATALOG — Comprehensive selection of English, German, and Japanese woodworking tools. Hegner, Inca, and Makita power tools, Freud cutters and blades, and a wide selection of woodworking books also featured. Fast, reliable mail order service. Toll-free orderline. HIGHLAND HARDWARE. $1.00. *Circle No. 730.*

BRASS FURNITURE HARDWARE — This 36-page catalog shows over 500 items of authentic reproduction hardware from the 1700's and on into this century. This fine quality hardware is a must for the furniture craftsman working on a new project, or the refinisher who needs replacement hardware. HORTON BRASSES. $2.00. *Circle No. 750.*

IF YOU ARE INTERSTED IN FINE WOODWORKING — you will not find better machinery than that sold by J.P. Humfrey Ltd. For example, we have 100, 10-in. general tablesaws (2 HP, magnetic switch, lever-lock fence) available at $1,295 FOB New York. Send for brochure. J. PHILIP HUMFREY LTD. $1.00. *Circle No. 770.*

START SMALL BUSINESS WITH NEW SCROLL SAW — The Excalibur precision scroll saw from Canada can turn your workshop into a profit center. Make toys and puzzles, do intricate marquetry work or detailed cabinet work with these "operator friendly" machines. Hundreds sold in the U.S. already. Save, buy direct, from $495. up. Complete project patterns and plans available. Send for brochure. J. PHILIP HUMFREY LTD. $1.00. *Circle No. 771.*

BUY YOUR SANDING BELTS DIRECT FROM THE MANUFACTURER — Industrial Abrasives is the company that gives you six free belts with every dozen ordered. But, sanding belts are not the only product we have to offer. In our catalog you will find many specialty items not readily available in your hardware store. Price of catalog refunded with first order. INDUSTRIAL ABRASIVES CO. $1.00. *Circle No. 780.*

THE CUSHION CONTOUR SANDER — is a new concept in pneumatic drum sanding. Sanding sleeves are slid over an air bag (inflated with a hand tire pump) on an arbor to mount it between centers on a wood lathe. Drum effectively takes on profiles, curves, and bevels practically eliminating flat spots and chatter marks. INDUSTRIAL ABRASIVES CO. Free. *Circle No. 781.*

THE FINE TOOL JOURNAL — Published 10 times per year, this publication will keep you up to date with the many aspects of the world of antique and obsoolete hand tools. Tools are offered for sale, books on tools are reviewed and sold, auctions are reviewed, articles on identification, values, and history. Send for sample copy. IRON HORSE ANTIQUES, INC. $1.50. *Circle No. 800.*

HOME CIDER PRESS KITS — Solid maple kits of full-size, working cider and wine press. Complete kits includes all wood parts pre-cut, all hardware, and plans. Low cost basic kit has all the hardware, you supply the wood. Fully assembled model also available. Makes gallons of sweet cider with incredible ease. Send for literature. JAFFREY MFG. CO. $1.00. *Circle No. 900.*

TOOLS—ANTIQUE AND USED — Quality, older hand tools for collectors and woodworkers. Many pre-1960 Stanley Tools. Hundreds of scarce planes, spoke-shaves, scrapers, drawknives, and other useable tools available. Illustrated tool lists published 5 times a year. Send for current list. BOB KAUNE. $1.00 *Circle No. 1020.*

DOVETAILS ARE EASY — with the Keller dovetail templates and your router. The simplest, most reliable system, always making accurate, through-dovetails. Works great for cabinets, furniture, and chests. Join wood up to 1-¼ in. thick and any width. Send for brochure on new model. KELLER DOVETAIL TEMPLATES. 50¢. *Circle No. 1022.*

QUALITY CLOCK KITS AND PLANS — Handmade and semi-assembled of carefully selected ¾ in. cherry, oak, or walnut with beveled glass. Or build from "scratch" using our detailed plans and trim pieces. Choice of quality movements. Established in 1916. KUEMPEL CHIME CLOCK WORKS. $1.50. *Circle No. 1070.*

FREE LITERATURE — New brochure showing all moisture meters and accessories for moisture meters such as interchangeable electrodes and probes and cables for in-kiln moisture monitoring. Complete line of moisture meters include: Pocket-size Mini-Ligno with LED readout 6%-20%, Mini Ligno E 6%-36%, analog display meters 4%-30%, 60% and a digital moisture meter with built-in compensation for different wood temperatures. LIGNOMAT USA, LTD. Free. *Circle No. 1130.*

PRODUCTION QUALITY CARBIDE TIPPED ROUTER BITS — MLCS Ltd. offers a full line of professional production quality carbide tipped router bits at 50-70% lower than retail prices. We sell through the mail and only direct to craftsmen. Send today for information. MLCS LTD. Free. *Circle No. 1210.*

WOODWORKING PLANS — Catalog of full-size plans printed on heavy paper for toys, gifts, novelties, action windmills, shelves, birdhouses, garden furniture, Dutch windmill, lawn ornaments, old-fashioned lawn swing, jigsaw projects for children,

TO ORDER THESE BOOKLETS, USE COUPON ON PAGE 116

and more. MASTERCRAFT PLANS WEST. $1.00. *Circle No. 1216.*

WOODWORKING BOOKS AT DISCOUNT PRICES — Most complete listing of books for woodworkers. Each book is discounted from 10 to 25% off the cover price. There is absolutely no shipping and handling charge. Woodworking, carving, turning, project books by authors such as Krenov, Frid, Spielman, Nish, Tangerman, and Hoadley are listed along with many hard-to-find titles. MANNY'S WOODWORKER'S PLACE. $2.00. *Circle No. 1217.*

WOODWORKER'S SPECIALTIES — 24-page catalog of plans and hard-to-find hardware for the woodworker. Brass hardware, screws, cork products, wood turnings, canister liners, clock movements, picture frame supplies, lamp parts, and more. MEISEL HARDWARE SPECIALTIES. $1.00. *Circle No. 1220.*

GERMAN STEEL TOOL CATALOG — 24 pages packed with finest quality tools manufactured in Germany. Included are thousands of unusual and hard-to-find chisels, gouges, parting tools, etc. — all hardened and tempered to hold a keen edge and give a lifetime of dependable service. FRANK MITTERMEIER, INC. Free. *Circle No. 1250.*

CLAMP AND STRAPPING KIT — Brochure features a simple operated clamping device for assembling cabinets, speakers, picture frames, door parts assembly, and cabinet framing needs. You get professional strapping results with MITY-TITE Adjustable Tension Tool. All parts are reusable. Great for assembling and holding of production parts while working on or glueing. Send for brochure and prices. MITY-TITE SYSTEMS. $1.00. *Circle No. 1255.*

WOODWORKING SUPPLIES CATALOG — Bob Morgan's new 36-page color catalog for woodworkers offers a broad choice of foreign and domestic veneers, woodcraft patterns, books, basswood carving blocks, hardwood lumber and turning squares (at factory-to-you prices), toymaking parts and plans, chair cane, spindles, dowels, shaker pegs, mug pegs, candle cups, and fancy inlay borders. Also included is a colorful wood selector chart, simplified veneering instructions, and introductory incentive offers. BOB MORGAN WOODWORKING SUPPLIES. $1.00. *Circle No. 1257.*

WOOD CARVING — You can obtain information on learning woodcarving by sending for our literature. The offer includes sample copy of *The Mallet Magazine* and two lesson sheets on carving. NATIONAL CARVERS MUSEUM. $1.00. *Circle No. 1300.*

WOODWORKING TOOL CATALOGS — R.A. Ness & Co., the Woodworkers Emporium, offers a 2-year subscription, a total of eight huge sale catalogs. Thousands of industrial quality items — machinery, hand tools, portable electric tools, and supplies — are featured at super sale prices. The fee is refundable with purchase. R. A. NESS & CO., the Woodworkers Emporium. $4.00. *Circle No. 1310.*

CLOCK COMPONENTS — We feature battery, pendulum, and chime quartz movements of all types: Urgos, Hermle, Grandmother, Grandfather cable drive and chain drive, keywind movements of all types. 400-day clocks, music box movements, flat and benzel type dials — plus a vast assortment of weather instruments. Hundreds of clock items. Very competitive. 75-page catalog. NEWPORT ENTERPRISES. Free. *Circle No. 1320.*

WOOD WORKERS—CARVERS SUPPLIES — Catalog on hard to find items. E-Z pneumatic drum sander, Foredom tools and accessories, Detail Master woodburning unit, abrasive cartridge rolls, books, patterns, much more. NORTH WEST CARVING SUPPLIES. $2.00. (Refundable). *Circle No. 1360.*

PERSONAL BRANDING IRON — Brochures describes line of branding irons that makes it easy to put your name on your work. Made especially for branding wood, they are available with 1, 2, or 3 lines of copy in either ⅛- or ¼-in. letters. Makes a clean, sharp mark that shows pride in workmanship. Also included is information on handscrew clamp hardware that allows you to make your own clamps at approximately 50% savings. NOVA TOOL CO. 50¢. *Circle No. 1380.*

LUMBER DRYING — Nyle Corp., the largest manufacturer in the United States of dehumidification Dry Kiln Systems, offers *Introduction to Dehumidification Lumber Drying.* NYLE CORP. $2.00. *Circle No. 1390.*

PIN ROUTER AND ROUTER BIT CATALOG — Brochure showing the inverted pin router, the most versatile, easy-to-operate pin router in the world. Designed for operator safety and comfort. Included is a 22-page router bit catalog of all industrial grade bits in both highspeed steel and carbide. C.R. ONSRUD, INC. $1.00. *Circle No. 1440.*

64-PAGE PROBLEM SOLVER CATALOG — Over 700 woodworking items. Authentically reproduced furniture pulls, knobs, locks, casters, table slides, hinges, supports, latches, catches, bed hardware, veneer, chair cane, books, and much more. Satisfaction guaranteed. PAXTON HARDWEARE LTD. $2.50. *Circle No. 1480.*

QUARTZ CLOCK MOVEMENTS — Deal directly with the nation's largest independent distributor of quartz clock movements. Thousands of ultra-thin, pendulum, and chime movements in stock at all times. Our 36-page catalog features a large selection of hands, dials, numerals, weather instruments, as well as many other clock making supplies. Most orders shipped within 48 hours. PRECISION MOVEMENTS. Free. *Circle No. 1555.*

LETTER LAYOUT GUIDES — Brochure containing complete information about a new product of special interest to scroll sawers, carvers, and wood sign makers. A lettering guide to layout large letters and numbers to be cut in wood or other materials. Made from a durable plastic material for years of use. Price of brochure is refundable with first order. SEYCO SALES CO. $3.00. *Circle No. 1710.*

MAKE WOOD SIGNS — SignCraft is the bimonthly magazine for the signmaker. Regular features include color photos, articles and tips about routed, carved, sandblasted and painted wood signs, plus many other types of hand produced signs. Have you ever considered putting your woodworking skills to work in the lucrative field of signmaking? Send for subscription information. SIGNCRAFT MAGAZINE. Free. *Circle No. 1723.*

23 REDWOOD PROJECTS — 36-page *Redwood Book of Wood/Book of Could It* features detailed plans for 23 redwood projects created by professionals in fine woodworking. Included are working-with-wood tips plus the fascinating story of redwood. SIMPSON TIMBER CO. $3.95. *Circle No. 1730.*

SLEEVELESS DRUM SANDERS — Economical—simply cut sandpaper from standard size sheets. Unique way of holding sandpaper to drum—a twist of the key tightens. Sponge rubber backing insures long wear of sandpaper. Sanders can be used on drill press, small motor, lathe, combo-tools, radial saw, hand drill, and other revolving devices. Send for brochure. SINGLEY SPECIALTY CO., INC. Free. *Circle No. 1735.*

HOME CRAFTSMAN BOOK CATALOG — over 125 titles in every area of woodworking and for every level of expertise. From detailed instructions on routers and table saws to exquisite patterns for decoys and wooden toys to the best in wood turning. Discounts available on every order, and the catalog charge is refundable on your first order. STERLING PUBLISHING CO., INC. $1.00. *Circle No. 1740.*

SYSTEMS IN JOINERY — New 25-page illustrated catalog featuring many uses of the joint-matic and introduction of other high quality machines, fixtures, and cutting tools that make many of the more difficult tasks in woodworking easier. STRONG TOOL DESIGN. $2.00. *Circle No. 1745.*

FINE WOODWORKING VIDEO TAPES — Now you can learn woodworking from top professionals in your own home, at your own pace. Our brochure describes the five tapes in the series: *Dovetailing a Draw, Bowl Turning, Wood Finishing, Carving a Ball-and-Claw Foot, and Radial-Arm-Saw Joinery* — all from the publishers of Fine Woodworking Magazine. TAUNTON PRESS. 50¢. *Circle No. 1800.*

TIMBERS COUNTRY STORE — Catalog features hundreds of woodworking supplies, toy patterns, furniture patterns, tool use and instruction books, woodworking pattern books, hardwood toy and furniture parts plus many hard to find tools and shop supplies. TIMBERS COUNTRY STORE. $1.00. *Circle No. 1820.*

ATTENTION WOODWORKERS — Learn how you can afford a quality 24 in. scroll saw that you build from a kit. Also ask how, with the WHEEL-RIGHT, you can mass- produce wooden wheels by using your drill press. THE TOOL COMPANY. $1.00. *Circle No. 1840.*

TOYMAKERS SUPPLIES — Catalog of over 100 full-size wooden toy patterns — classic to contemporary designs from Packard Le Baron to Streamlined train and moon machine. Easy to follow, fully illustrated patterns which appeal to all ages. Hardwood wheels, shaker pegs, axles, etc., in stock. Accessory kits of pattern and turnings available. TOY DESIGNS. $1.50. *Circle No. 1860.*

WOOD TOY PATTERNS — Patterns for all ages including childrens' patterns and executive toys. New catalog has many new patterns to choose from including parts and wheels. Send for new catalog and receive a coupon for free wheels and axle pegs. TOYS AND JOYS. $1.00. *Circle No. 1865.*

WOODWORKERS CATALOG — of discount power tools, hand tools, books, plans, saw blades, router bits, sanding belts and sheets, cane, adhesives, screws, and much more. One year catalog subscription (3 to 4 issues) also includes a subscription to "Woodworking Trends", a house publication debuting this spring. TREND-LINES, INC. $2.00. *Circle No. 1870.*

IF YOU ARE INTERESTED IN RESTORING ANTIQUES — this 112-page catalog packed with unusual, hard-to-find items is just for you. Included are hundreds of essential items for antique restoration including top quality brass reproduction hardware, oil lamps and accessories, numerous wood component repair parts and kits, caning and basketry supplies, everything needed for wood refinishing, related tools, books, and a complete line of upholstery equipment and supplies. All at wholesale prices. Send for this informative catalog. VAN DYKE' SUPPLY CO. Free. *Circle No. 1970.*

WOODCARVING TOOLS — Whittlers and carvers — Warren Tool Co. offers a catalog for you full of whittling and carving hand/power tools, books, stones, wood, and supplies. Since 1927, the finest in woodcarvers tools. WARREN TOOL CO., INC. 60¢. *Circle No. 2020.*

BEAUTIFUL WOOD FINISHING —. with Watco Danish Oil Wood Finish. Full-color *How to Beautifully Finish Wood* booklet enables anyone to create professional finishes the first time with all types of wood. One application of Watco Wood Finish seals, primes, finishes, hardens, protects, beautifies, penetrates deeply into the wood; outlasts surface coats three to one. Eight attractive Danish Oil colors now available. Eliminates pre-staining. WATCO-DENNIS CORP. Free. *Circle No. 2025.*

FREE: HOW TO SAVE TIME AND MATERIAL — Work with confidence and control. SHOPHELPER Safety Guides provide stability, to help eliminate binding, chatter, and kickback. With an extra pair of hands from SHOPHELPER you can hold work firmly on table and radial saws, shapers, band saws, and others. Complete information and operator's manual from WESTERN COMMERCIAL PRODUCTS. Free. *Circle No. 2040.*

WOODWORKERS CATALOG — More than a catalog — it's one of the best sources for quality woodworking tools. You'll find everything from bit braces to wood borers, from saws to sharpening stones. Every product is sold satisfaction guaranteed. WOODCRAFT SUPPLY CORP. Free *Circle No. 2070.*

THE JAPAN WOODWORKER'S 1984 CATALOG — is loaded with the best tools you can get your hands on. In our catalog you will find a complete selection of Japanese tools for the woodcarver, carpenter, and cabinet maker. Send for catalog plus supplements for next two years. WOODLINE-THE JAPAN WOODWORKER. $1.50. *Circle No. 2075.*

POWER-FEED DRUM SANDER — Use the Woodmaster Model 1200 to dimension and finish-sand cabinet pieces, resawn stock, paneling, grandfather clocks, toys, table tops, knees, burls, crotches, and much more. This heavy-duty 12 in. sander comes complete with motor and stand. 30 day free trial. . .easy terms. Send for information kit. WOODMASTER TOOLS. Free. *Circle No. 2080.*

HIGH PRECISION SCROLL SAW — The sturdy, new Woodmaster Model 1600 gives you all the fea-

TO ORDER THESE BOOKLETS, USE COUPON ON PAGE 116

Do-it-Yourself
WOODWORKERS

You can build it cheaper than buy it...

You can restore & refinish it cheaper than hire it!

Here's everything you need

Mail Coupon for— 116 Pages

CONSTANTINE'S Woodworker Catalog

IF YOU are at all handy with tools—or willing to learn in easy steps—here's the modern-day way to SAVE considerable sums of money. Build what you need. Restore and refinish what you own. Save on every project.

Everything you need—fine woods, veneers, specialty tools, wood finishes and how-to guidance—can be ordered by mail from Constantine. Read this partial list of CATALOG OFFERS: 14 kinds of cabinet & furniture woods, 90 veneers plus 19 flexible veneers to cover beatup or unpainted furniture. 76 inlays, 59 borders, 54 carving blocks, 118 carving tools & chisels, 32 upholstery tools & essentials, 39 clamps, 33 finished picture moldings, 72 lamp parts, 500 plans, 96 how-to books. Kitchen cabinet space-savers, carved molding, drill attachments, carbide saw blades.

ALSO: cane, fiber rush, reed. Period & modern hardware: latches, locks, hinges, pulls, escutcheons. Small-box hdwe. Framing clamps, wood-threading tools, angle-cutting jig, circle cutter, veneer saw, bow saw, mat cutter, miter trimmer, deep-throat fret saw. Turned, carved, square-taper furniture legs, wood bowl seal. Kits: gameboards, guitar, lazy Susan, furniture, clocks, coffee mill & pepper mill. Sliding & revolving hdwe. Plus page after page of useful products for shop, home and crafts.

Get $2 BACK

Mail coupon now for dollar Catalog. We include $2 refund Certificate good on 1st catalog order!

CONSTANTINE Est. 1812
2054 Eastchester Rd., Bronx, N.Y. 10461

☐ Send new Woodworker Catalog. $1 enclosed.

$2 Refunded
Double Your Money Back!
$2 Refunded on 1st Catalog order

Name_____

Address_____

City State Zip

tures found in more expensive machines including big, 16-in. throat capacity, 2-in. cutting depth, a generous, oversized worktable, ball-bearing drive . . . and much more! Send for complete facts. See how you can use the Woodmaster Model 1600 in your own shop for one full month completely without risk. Send for information kit. WOODMASTER TOOLS, INC. Free. *Circle No. 2081.*

GIANT 24½-IN., 3-SPEED BAND SAW — Big 24½-in. throat easily handles large scrollwork, complex curves, 4x8 sheets. 9-in. vertical cut makes it easy to resaw valuable hardwoods. Ball bearing construction, all-steel welded frame to eliminate deflection. Can be ordered complete with motor, stand, dust collector, rip fence, scroll saw table. Full instructions. Send for complete facts on how you can try this versatile saw without risk. Easy terms. WOODMASTER TOOLS, INC. Free. *Circle No. 2082.*

PLANER/MOLDER/JOINTER/SANDER — This variable speed, power feed tool converts low-cost lumber into valuable finished stock. Turns out perfect quarter-round, casing, base mold, tongue and groove . . . all popular patterns including picture frames. Joints super-true edges, squared stock, bevels and chamfers. Optional sanding attachment quickly converts unit to one of the finest drum sanders available. 30-day free trial . . . easy terms. Send for information kit. WOODMASTER TOOLS, INC. Free. *Circle No. 2083.*

WOODWORKING ASSOCIATION OF NORTH AMERICA — First International Association for Woodworkers. Sample benefits include our quarterly magazine "International Woodworking", specials from selected manufacturers, group health, access to the woodworking network. WOODWORKING ASSOCIATION OF NORTH AMERICA. Free. *Circle No. 2127.*

QUALITY AMERICAN-MADE WOOD TURNINGS — such as shaker pegs, spindles, toy wheels, toy parts, craft items, and dowel rods in birch, oak, walnut, and cherry. Send for complete 32-page catalog. WOODWORKS. $1.00. *Circle No. 2130.*

WOOD WORLD CATALOG — Send for your catalog on lumber, veneer, hand and power tools, with helpful hints on how to use your tools and materials to their best advantage. Send for complete color catalog. WOOD WORLD. $2.50. *Circle No. 2140.*

EXOTIC HARDWOODS — Wyndham Woods offers the finest exotic hardwoods, precision cut and dried to our specifications at a modern European mill. As a direct importer we can offer substantial savings on such fine woods as padouk, mahogany, shedua, doussie, zebrawood, and many others, as well as domestic species and veneers. For the best wood at the best prices, send for our catalog. WYNDHAM WOODS, INC. $1.00 (Refundable with order). *Circle No. 2160.*

CARBIDE ROUTER AND SHAPER BITS — Our industrial carbide router bits will make you and your work achieve your goals, make things happen, and avoid problems. Zac router bits will expand your possibilities and options while giving the precise details you need. With your router and our tooling your shop becomes a system that you and your family will be proud of. Feel the satisfaction of improving your shops while you and others will know you bought the best. We consistently deliver high-quality router bits shaper cutters. Our 32-page catalog will improve your knowlege and skills. Send for it today. ZAC PRODUCTS, INC. $2.50. *Circle No. 2195.*

Information

WORTH WRITING FOR

Better Homes and Gardens®
WOOD, October, 1985 Dept. SOWO5
P.O. BOX 2051
CLINTON, IA 52732

TO ENSURE PROMPT HANDLING OF YOUR ORDER FOLLOW THESE INSTRUCTIONS:

- **Circle your choice**
- **Enclose cash, check, money order for cost of booklets plus $2.00 service charge (no stamps/foreign)**
- **Coupon expires October 21, 1986**
- **Send coupon and remittance to address above**
- **ALLOW 4-6 WEEKS FOR DELIVERY**
- **Be sure to include payment with remittance total below**

WOOD SUBSCRIPTION

1 year WOOD subscription (6 issues) for $15.00 a $6.00 savings off newstand rate. Allow 6-8 weeks for first issue. Add $6.00 outside U.S.

FREE LITERATURE

Circle numbers below corresponding to items in this issue.
Please include $2.00 for handling charge

20. 267. 273. 278.	402. 460. 550. 551.	552. 781. 1130. 1210.	1250. 1320. 1555. 1723.	1735. 1970. 2025. 2040.	2070. 2080. 2081. 2082.	2083. 2127.

PRICED LITERATURE

Numbers below refer to items on which there is a charge.
Please include proper remittance.

1.... $1.00 2.... $1.00 10.... $1.00 12.... $2.00 15.... $2.00 30.... $1.00 45.... $1.00 50.... $2.00 65.... $1.00 66..... 50¢ 100.... $1.00 130.... $2.00	145.... $1.00 150.... $4.50 230.... $1.00 250.... $1.00 258.... $1.00 259.... $1.00 260.... $1.00 265.... $1.00 266.... $1.00 270.... $1.00 303.... $1.00 304.... $3.00	307.... $1.00 309.... $1.00 315..... 50¢ 320.... $1.00 400.... $5.00 420.... $2.00 450..... 50¢ 495.... $1.00 530..... 25¢ 560.... $5.00 585.... $2.00 600.... $3.00	630..... 25¢ 631.. $12.00 650.... $1.00 710.... $1.00 730.... $1.00 750.... $2.00 770.... $1.00 771.... $1.00 780.... $1.00 800.... $1.50 900.... $1.00 1020.... $1.00	1022..... 50¢ 1070.... $1.50 1216.... $1.00 1217.... $2.00 1220.... $1.00 1255.... $1.00 1257.... $1.00 1258.... $1.00 1300.... $1.00 1310.... $4.00 1360.... $2.00 1380..... 50¢	1390.... $2.00 1440.... $1.00 1480.... $2.50 1710.... $3.00 1730.... $3.95 1740.... $1.00 1745.... $2.00 1800..... 50¢ 1820.... $1.00 1840.... $1.00 1860.... $1.50 1865.... $1.00	1870.... $2.00 2020..... 60¢ 2075.... $1.50 2130.... $1.00 2140.... $2.50 2160.... $1.00 2195.... $2.50

If you're going to be the finest handyman in the neighborhood, you need the finest designed circular saw in the world.

At Skil, we believe that innovation is only worthwhile if it makes the job easier. And that's why we designed our Skilsaw® Circular Saw 5350 to be the most unique in the world. Because it has more useful features than any other circular saw in its class.

Like a remote lower lift lever that makes pocket cuts a snap. Handy scales and cutting guides, such as a 6-inch ruler on the footplate, so you're never without one. And a built-in blade wrench storage slot that always keeps the wrench with the tool.

Not to mention, a tough 2⅓ horsepower motor that zips through some of the most challenging materials. Textured handles for better control. And a feature that's tough to find on other circular saws; a lateral lock-off button that works easily for right- or left-handed operators.

But best of all, the 5350 delivers all these great features at a price that's tough to beat.

So, even if you're not the finest handyman on the block yet, with the 5350 your work will challenge the best.

SKIL® We build tools that last and last and last.

EMERSON

SKIL CORPORATION
SUBSIDIARY OF EMERSON ELECTRIC CO.
4801 WEST PETERSON AVENUE
CHICAGO, IL 60646

Ryobi and Freud.

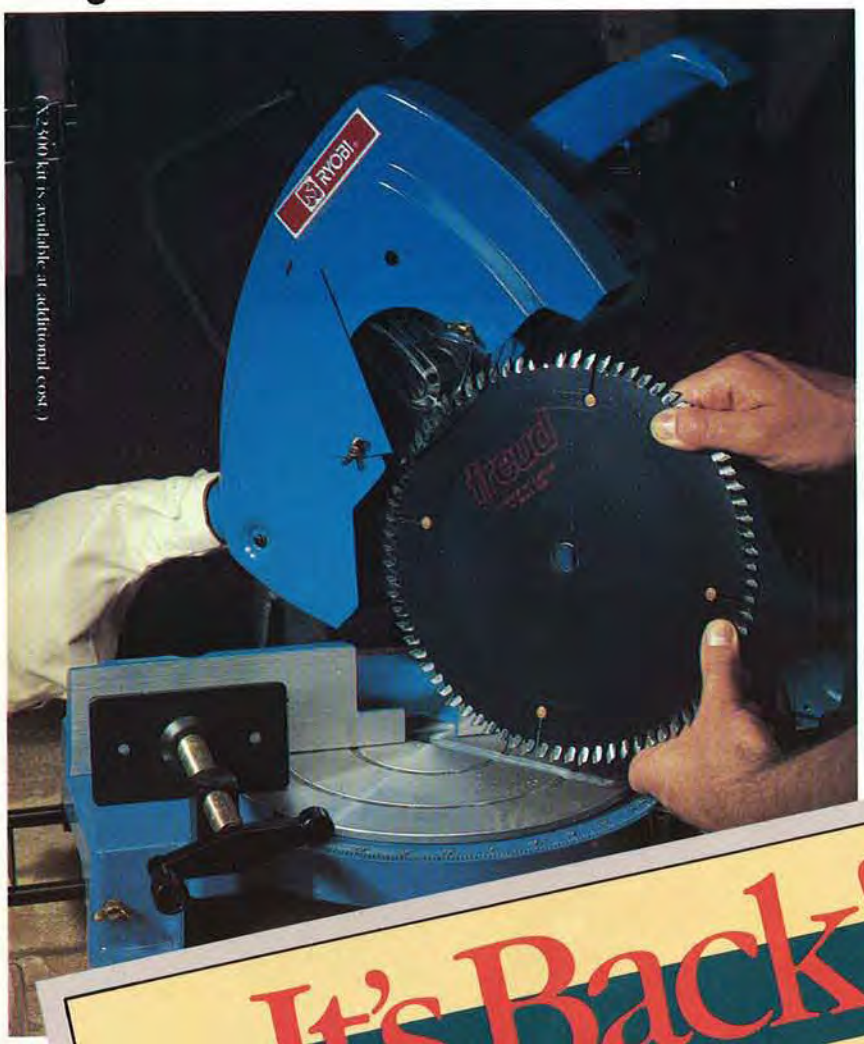

Super saw... Super blade... Super deal!!

It's Back!

The best in power tools and saw blades is yours once again in one super offer.

While quantities last, buy a Ryobi 10″ Miter Saw and Freud 80-tooth carbide tipped saw blade at participating dealers for only $229.95.
(suggested list price $410.88).

Ryobi Miter Saw Model TS-251U
- Die-cast aluminum turntable moves with saw head
- Automatic electric braking system stops blades in seconds
- Positive click stops at 0, 22-½ and 45 degrees both left and right
- Degree markings cast into the base for permanency
- Lightweight design made even better by an exclusive carrying handle
- 12.5 amp heavy duty motor
- Superior accuracy for trims, baseboards, mitering . . . even 2 x 4's

Freud Blade LU85M010
- Features Freud's state-of-the-art design and engineering
- Carbide tipped for fast cutting and long life
- 80 teeth for smooth precision cuts
- Self lubricating – body is coated with anti-grip material

Call **1-800-621-1776** for the participating dealer nearest you.
In Illinois call **1-800-572-6724.**

RYOBI®

Ryobi America Corporation
1158 Tower Lane
Bensenville, IL 60160